SSF

Sam Sung Fitting

ANSI B16.5-2010

Pipe Flanges and Flanged Fittings

- Class 150 Flanges
- Class 300 Flanges
- Class 400 Flanges
- Class 600 Flanges
- Class 900 Flanges
- Class 1500 Flanges
- Class 2500 Flanges

CLASS 150 FLANGES

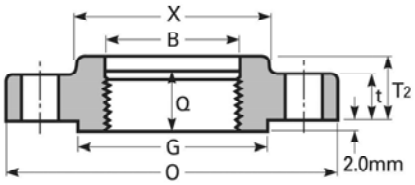

THREADED

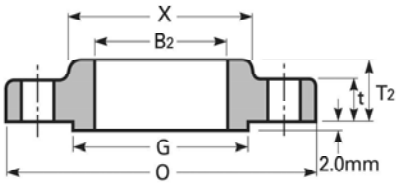

SLIP-ON

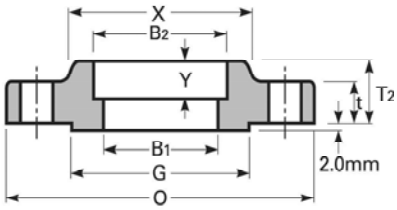

SOCKET WELDING

ASME B16.5-2003ED FORGED FLANGES

Unit : mm

SIZE	Out -side Diam.	Thick -ness	Diam. of HUB	O.D of Raised Face	Diam. of Hub at Bavel	Length Through Hub			Thread Length	BORE			Ridius of Fillet	Depth of Socket
						Wel-ding Neck	Slip-On Threaded Socket Welding	Lap Joint		Welding Neck /Socket Welding	Slip-On /Socket-Welding	Lap Joint		
	O	t	X	G	A	T_1	T_2	T_3	Q	B_1	B_2	B_3	R	Y
1/2	90	9.6	30	35.1	21.3	46	14	16	16	15.8	22.2	22.9	3	10
3/4	100	11.2	38	42.9	26.7	51	14	16	16	20.9	27.7	28.2	3	11
1	110	12.7	49	50.8	33.4	54	16	17	17	26.6	34.5	34.9	3	13
1 1/4	115	14.3	59	63.5	42.2	56	19	21	21	35.1	43.2	43.7	5	14
1 1/2	125	15.9	65	73.2	48.3	60	21	22	22	40.9	49.5	50.0	6	16
2	150	17.5	78	91.9	60.3	62	24	25	25	52.5	61.9	62.5	8	17
2 1/2	180	20.7	90	104.6	73.0	68	27	29	29	62.7	74.6	75.4	8	19
3	190	22.3	108	127.0	88.9	68	29	30	30	77.9	90.7	91.4	10	21
3 1/2	215	22.3	122	139.7	101.6	70	30	32	32	90.1	103.4	104.1	10	22.4
4	230	22.3	135	157.2	114.3	75	32	33	33	102.3	116.1	116.8	11	24.1
5	255	22.3	164	185.7	141.3	87	35	36	36	128.2	143.8	144.4	11	23.9
6	280	23.9	192	215.9	168.3	87	38	40	40	154.1	170.7	171.4	13	26.9
8	345	27.0	246	269.7	219.1	100	43	44	44	202.7	221.5	222.2	13	31.8
10	405	28.6	305	323.9	273.0	100	48	49	49	254.6	276.2	277.4	13	33.3
12	485	30.2	365	381.0	323.8	113	54	56	56	304.8	327.0	328.2	13	39.6
14	535	33.4	400	412.8	355.6	125	56	79	57	To be Specified by Pur-chaser	359.2	360.2	13	41.4
16	595	35.0	457	469.9	406.4	125	62	87	64		410.5	411.2	13	44.5
18	635	38.1	505	533.4	457.0	138	67	97	68		461.8	462.3	13	49.3
20	700	41.3	559	584.2	508.0	143	71	103	73		513.1	514.4	13	54.1
24	815	46.1	663	692.2	610.0	151	81	111	83		616.0	616.0	13	63.5

Notes :

(a) For the 'BORE' (B_1) other than Standard Wall Thickness, refer to page 54-55.

(b) These flanges may be supplied with a flat face. The flat face may be either the full t dimension of thickness plus 2 mm, or the t dimension thickness without the raised face height.

(c) This dimension is for large end of hub, which may be straight or tapered. Taper shall not exceed 7 deg on threaded, slip-on, socket-welding, and lapped flanges. This dimension is defined as the diameter at the intersection between the hub taper and the back face of the flange.

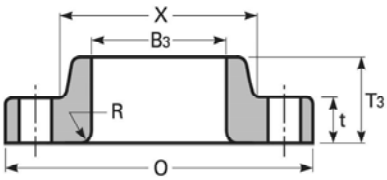

LAP JOINT

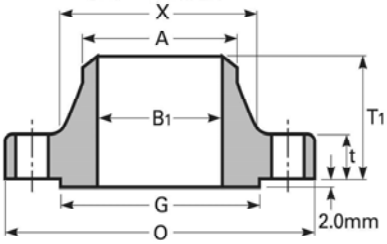

WELDING NECK

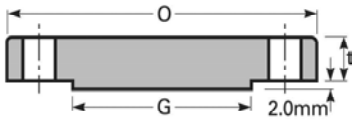

BLIND

Unit : mm

SIZE	DRILLING			BOLTING				APPROXIMATE WEIGHT(Kg)				
	Bolt Circle Diam.	Number of Holes	Diam. of Holes	Diam. of Bolt (inch)	Machine Bolt Length (Raised Face)	Stud Bolt Length		Welding Neck	Slip-On/ Thre-aded	Lap Joint	Blind	Socket Welding
						2mm Raised Face	Ring Joint					
1/2	60.3	4	15.9	1/2	50	55	-	0.51	0.47	0.51	0.47	0.47
3/4	69.9	4	15.9	1/2	50	65	-	0.73	0.58	0.64	0.63	0.59
1	79.4	4	15.9	1/2	55	65	75	1.07	0.86	0.93	0.94	0.87
1 1/4	88.9	4	15.9	1/2	55	70	85	1.40	1.08	1.16	1.23	1.11
1 1/2	98.4	4	15.9	1/2	65	70	85	1.81	1.41	1.51	1.62	1.45
2	120.7	4	19.1	5/8	70	85	95	2.59	2.26	2.38	2.64	2.33
2 1/2	139.7	4	19.1	5/8	75	90	100	4.28	3.43	3.60	4.06	3.55
3	152.4	4	19.1	5/8	75	90	100	5.18	3.87	4.04	4.90	4.02
3 1/2	177.8	8	19.1	5/8	75	90	100	5.45	4.99	4.99	5.90	4.99
4	190.5	8	19.1	5/8	75	90	100	7.32	5.75	5.96	7.41	5.99
5	215.9	8	22.2	3/4	85	95	110	8.91	6.22	6.44	8.76	6.68
6	241.3	8	22.2	3/4	85	100	115	11.26	7.38	7.59	11.31	7.99
8	298.5	8	22.2	3/4	90	110	120	17.68	12.36	12.66	19.92	13.29
10	362.0	12	25.4	7/8	100	115	125	24.79	17.10	16.78	29.39	19.50
12	431.8	12	25.4	7/8	100	120	135	38.98	27.68	28.30	43.70	29.03
14	476.3	12	28.6	1	115	135	145	51.71	35.20	41.50	59.42	38.56
16	539.8	16	28.6	1	115	135	145	64.41	42.18	52.98	77.11	44.49
18	577.9	16	31.8	1 1/8	125	145	160	74.84	49.71	59.00	94.80	54.43
20	635.0	20	31.8	1 1/8	140	160	170	89.36	65.50	72.12	123.38	70.31
24	749.3	20	34.9	1 1/4	150	170	185	119.66	90.50	99.02	188.24	95.25

(d) Blind flanges may be made with or without hubs at the manufacturer's option.

(e) Dimensions in B_1 correspond to the inside diameters of pipe as given in ASME B36.10M for Standard Wall pipe. Thickness of Standard Wall is the same as Schedule 40 in sizes NPS 10 and smaller. These bore sizes are furnished unless otherwise specified by the purchaser.

(f) Depth of Socket(Y) is covered by ASME B16.5 only in sizes through 3 inch, over 3 inch is at the manufacture's option.

CLASS 300 FLANGES

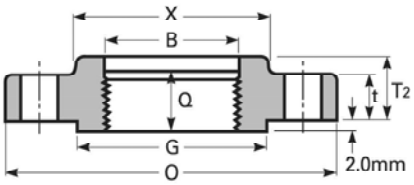

THREADED

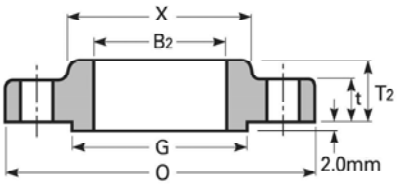

SLIP-ON

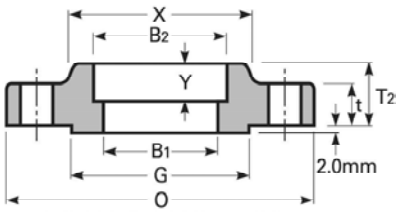

SOCKET WELDING

ASME B16.5-2003ED FORGED FLANGES

Unit : mm

Nominal Pipe Size	Outside Diam.	Thickness	Thickness Lap Joint	Diam. of Hub	O.D of Raised Face	Diam. of Hub at Bavel	Length Through Hub			Thread Length	BORE			
							Welding Neck	Slip-On Threaded Socket Welding	Lap Joint		Welding Neck /Socket Welding	Slip-On /Socket-Welding	Lap Joint	Counter Bore Min. Threaded
	O	t	t	X	G	A	T_1	T_2	T_3	Q	B_1	B_2	B_3	B
1/2	95	12.7	14.3	38	35.1	21.3	51	21	22	16	15.8	22.2	22.9	23.6
3/4	115	14.3	15.9	48	42.9	26.7	56	24	25	16	20.9	27.7	28.2	29.0
1	125	15.9	17.5	54	50.8	33.4	60	25	27	18	26.6	34.5	34.9	35.8
1 1/4	135	17.5	19.1	64	63.5	42.2	64	25	27	21	35.1	43.2	43.7	44.4
1 1/2	155	19.1	20.7	70	73.2	48.3	67	29	30	23	40.9	49.5	50.0	50.3
2	165	20.7	22.3	84	91.9	60.3	68	32	33	29	52.5	61.9	62.5	63.5
2 1/2	190	23.9	25.4	100	104.6	73.0	75	37	38	32	62.7	74.6	75.4	76.2
3	210	27.0	28.6	117	127.0	88.9	78	41	43	32	77.9	90.7	91.4	92.2
3 1/2	230	28.6	30.2	133	139.7	101.6	79	43	44	37	90.1	103.4	104.1	104.9
4	255	30.2	31.8	146	157.2	114.3	84	46	48	37	102.3	116.1	116.8	117.6
5	280	33.4	35.0	178	185.7	141.3	97	49	51	43	128.2	143.8	144.4	144.4
6	320	35.0	36.6	206	215.9	168.3	97	51	52	47	154.1	170.7	171.4	171.4
8	380	39.7	41.3	260	269.7	219.1	110	60	62	51	202.7	221.5	222.2	222.2
10	445	46.1	47.7	321	323.9	273.0	116	65	95	56	254.6	276.2	277.4	276.2
12	520	49.3	50.8	375	381.0	323.8	129	71	102	61	304.8	327.0	328.2	328.6
14	585	52.4	54.0	425	412.8	355.6	141	75	111	64	To be Specified by Purchaser	359.2	360.2	360.4
16	650	55.6	57.2	483	469.9	406.4	144	81	121	69		410.5	411.2	411.2
18	710	58.8	60.4	533	533.4	457.0	157	87	130	70		461.8	462.3	462.0
20	775	62.0	63.5	587	584.2	508.0	160	94	140	74		513.1	514.4	512.8
24	915	68.3	69.9	702	692.2	610.0	167	105	152	83		616.0	616.0	614.4

Notes :

(a) For the 'BORE' (B_1) other than Standard Wall Thickness, refer to page 54-55.

(b) These flanges may be supplied with a flat face. The flat face may be either the full t dimension of thickness plus 2 mm, or the t dimension thickness without the raised face height.

(c) This dimension is for large end of hub, which may be straight or tapered. Taper shall not exceed 7 deg on threaded, slip-on, socket-welding, and lapped flanges. This dimension is defined as the diameter at the intersection between the hub taper and the back face of the flange.

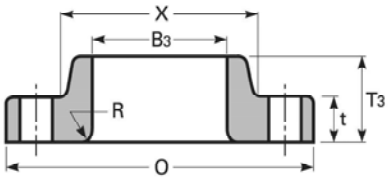

LAP JOINT

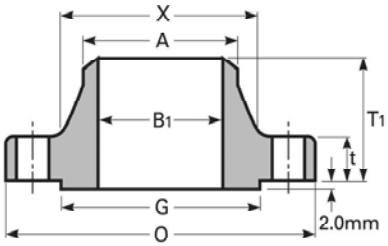

WELDING NECK

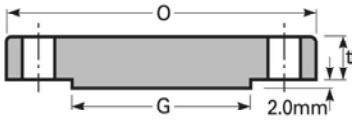

BLIND

Unit : mm

Nominal Pipe Size	Ridius of Fillet	Depth of Socket	DRILLING			BOLTING				APPROXIMATE WEIGHT(Kg)				
			Bolt Circle Diam.	Num. of Holes	Diam. of Holes	Diam. of Bolt (inch)	Machine Bolt Length (Raised Face)	Stud Bolt Length		Welding Neck	Slip-On/ Threaded	Lap Joint	Blind	Socket Welding
								2mm Raised Face	Ring Joint					
	R	Y												
1/2	3	10	66.7	4	15.9	1/2	55	65	75	0.78	0.62	0.61	0.62	0.62
3/4	3	11	82.6	4	19.1	5/8	65	75	90	1.34	1.15	1.15	1.16	1.19
1	3	13	88.9	4	19.1	5/8	65	75	90	1.64	1.39	1.38	1.42	1.44
1 1/4	5	14	98.4	4	19.1	5/8	70	85	95	2.06	1.67	1.66	1.79	1.73
1 1/2	6	16	114.3	4	22.2	3/4	75	90	100	3.06	2.53	2.52	2.68	2.62
2	8	17	127.0	8	19.1	5/8	75	90	100	3.40	2.80	2.79	3.09	2.94
2 1/2	8	19	149.2	8	22.2	3/4	85	100	115	5.31	4.25	4.22	4.75	4.49
3	10	21	168.3	8	22.2	3/4	90	110	120	7.32	5.81	5.78	6.79	6.20
3 1/2	10	22.4	184.2	8	22.2	3/4	95	110	125	8.17	7.72	7.72	9.53	-
4	11	23.9	200.0	8	22.2	3/4	95	115	125	11.30	10.13	10.07	12.00	-
5	11	23.9	235.0	8	22.2	3/4	110	120	135	15.12	12.58	12.52	15.96	-
6	13	26.9	269.9	12	22.2	3/4	110	120	140	19.68	16.04	15.95	21.20	-
8	13	31.8	330.2	12	25.4	7/8	120	140	150	30.48	24.50	24.37	34.60	-
10	13	33.3	387.4	16	28.6	1	140	160	170	43.74	34.16	39.92	55.34	-
12	13	39.6	450.8	16	31.8	1 1/8	145	170	185	64.41	51.26	58.70	78.90	-
14	13	41.4	514.4	20	31.8	1 1/8	160	180	190	88.30	72.12	83.46	107.05	-
16	13	44.5	571.5	20	34.9	1 1/4	165	190	205	112.94	90.40	106.14	139.25	-
18	13	49.3	628.6	24	34.9	1 1/4	170	195	210	138.34	109.00	133.95	176.90	-
20	13	54.1	685.8	24	34.9	1 1/4	185	205	220	167.37	136.00	157.65	223.17	-
24	13	63.5	812.8	24	41.3	1 1/2	205	230	255	235.41	204.00	240.40	342.00	-

(d) Blind flanges may be made with or without hubs at the manufacturer's option.

(e) Dimensions in B_1 correspond to the inside diameters of pipe as given in ASME B36.10M for Standard Wall pipe. Thickness of Standard Wall is the same as Schedule 40 in sizes NPS 10 and smaller. These bore sizes are furnished unless otherwise specified by the purchaser.

(f) Depth of Socket(Y) is covered by ASME B16.5 only in sizes through 3 inch, over 3 inch is at the manufacture's option.

CLASS 400 FLANGES

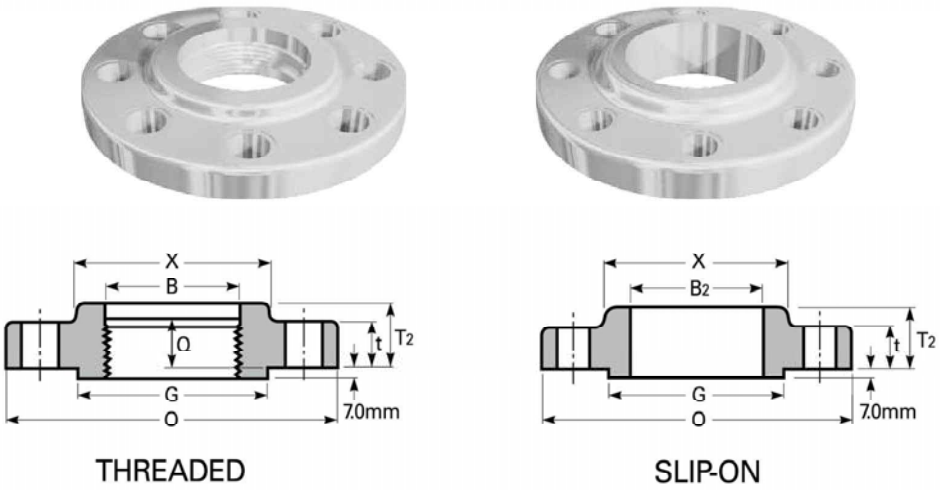

ASME B16.5-2003ED

Unit : mm

Nominal Pipe Size	Outside Diam.	Thickness	Diam. of Hub	O.D of Raised Face	Diam. of Hub at Bavel	Length Through Hub			Thread Length	BORE			
						Welding Neck	Slip-On Threaded Socket Welding	Lap Joint		Welding Neck /Socket Welding	Slip-On /Socket-Welding	Lap Joint	Counter Bore Min. Threaded
	O	t	X	G	A	T_1	T_2	T_3	Q	B_1	B_2	B_3	B
1/2	95	14.3	38	35.1	21.3	52	22	22	16	To be Specified by Purchaser.	22.2	22.9	23.6
3/4	115	15.9	48	42.9	26.7	57	25	25	16		27.7	28.2	29.0
1	125	17.5	54	50.8	33.4	62	27	27	18		34.5	34.9	35.8
1 1/4	135	20.7	64	63.5	42.2	67	29	29	21		43.2	43.7	44.4
1 1/2	155	22.3	70	73.2	48.3	70	32	32	23		49.5	50.0	50.6
2	165	25.4	84	91.9	60.3	73	37	37	29		61.9	62.5	63.5
2 1/2	190	28.6	100	104.6	73.0	79	41	41	32		74.6	75.4	76.2
3	210	31.8	117	127.0	88.9	83	46	46	35		90.7	91.4	92.2
3 1/2	230	35.0	133	139.7	101.6	86	49	49	40		103.4	104.1	104.9
4	255	35.0	146	157.2	114.3	89	51	51	37		116.1	116.8	117.6
5	280	38.1	178	185.7	141.3	102	54	54	43		143.8	144.5	144.4
6	320	41.3	206	215.9	168.3	103	57	57	46		170.7	171.4	171.4
8	380	47.7	260	269.7	219.1	117	68	68	51		221.5	222.2	222.2
10	445	54.0	321	323.9	273.0	124	73	102	56		276.2	277.4	276.2
12	520	57.2	375	381.0	323.8	137	79	108	61		327.0	328.2	328.6
14	585	60.4	425	412.8	355.6	149	84	117	64		359.2	360.2	360.4
16	650	63.5	483	469.9	406.4	152	94	127	69		410.5	411.2	411.2
18	710	66.7	533	533.4	457.0	165	98	137	70		461.8	462.3	462.0
20	775	69.9	587	584.2	508.0	168	102	146	74		513.1	514.4	512.8
24	915	76.2	702	692.2	610.0	175	114	159	83		616.0	616.0	614.4

Notes :

(a) For the 'BORE' (B_1) other than Standard Wall Thickness, refer to page 54-55.

(b) These flanges may be supplied with a flat face. The flat face may be either the full t dimension of thickness plus 7mm, or the t dimension thickness without the raised face height.

(c) This dimension is for large end of hub, which may be straight or tapered. Taper shall not exceed 7 deg on threaded, slip-on, socket-welding, and lapped flanges. This dimension is defined as the diameter at the intersection between the hub taper and the back face of the flange

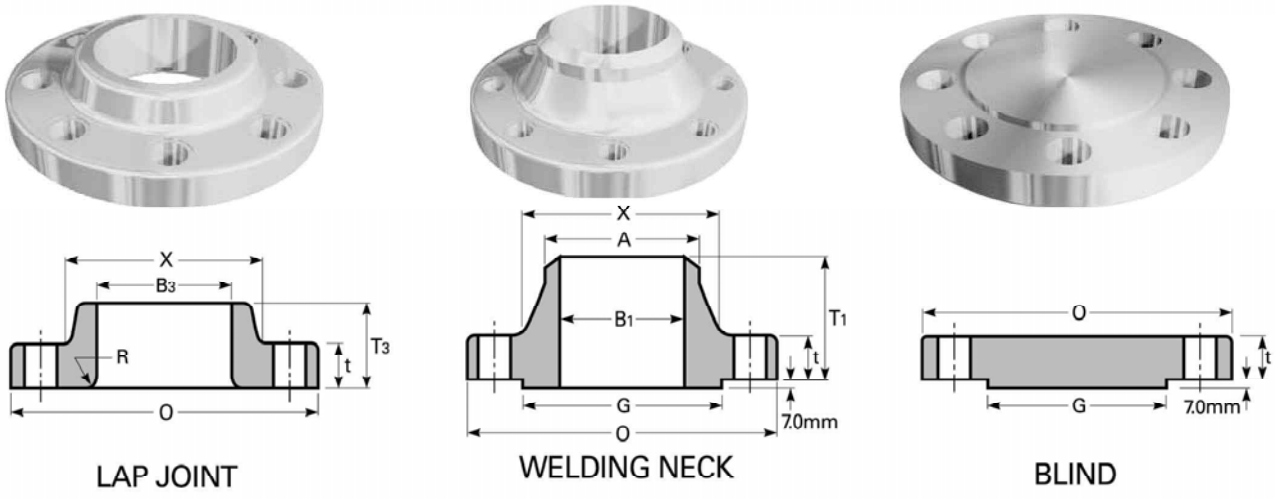

Unit : mm

Nominal Pipe Size	Ridius of Fillet R	DRILLING			BOLTING				APPROXIMATE WEIGHT(Kg)			
		Bolt Circle Diam.	Num. of Holes	Diam. of Holes	Diam. of Bolt (inch)	Stud Bolt Length: Male-Female Tongue-Groove	Stud Bolt Length: 7mm Raised Face	Stud Bolt Length: Ring Joint	Welding Neck	Slip-On/ Threaded	Lap Joint	Blind
1/2	3	66.7	4	15.9	1/2	70	75	75	1.36	0.91	0.80	0.91
3/4	3	82.6	4	19.1	5/8	85	90	90	1.59	1.36	1.36	1.40
1	3	88.9	4	19.1	5/8	85	90	90	1.81	1.59	1.59	1.70
1 1/4	5	98.4	4	19.1	5/8	90	95	95	2.50	2.10	2.04	2.27
1 1/2	6	114.3	4	22.2	3/4	100	110	110	3.63	3.10	2.95	3.40
2	8	127.0	8	19.1	5/8	100	110	110	4.54	3.63	3.63	4.40
2 1/2	8	149.2	8	22.2	3/4	115	120	120	6.35	5.44	4.99	6.80
3	10	168.3	8	22.2	3/4	120	125	125	8.17	7.26	6.35	8.90
3 1/2	10	184.2	8	25.4	7/8	135	140	140	11.80	9.53	9.08	13.17
4	11	200.0	8	25.4	7/8	135	140	140	13.61	10.89	9.98	14.40
5	11	235.0	8	25.4	7/8	135	145	145	17.69	14.07	13.15	19.50
6	13	269.9	12	25.4	7/8	145	150	150	22.23	19.98	16.78	27.67
8	13	330.0	12	28.4	1	165	170	170	35.38	30.40	26.16	45.36
10	13	387.4	16	31.8	1 1/8	185	190	190	49.89	41.28	43.09	68.00
12	13	450.8	16	35.1	1 1/4	195	205	205	72.57	59.02	68.95	98.00
14	13	514.4	20	35.1	1 1/4	205	210	210	105.69	81.72	95.25	131.66
16	13	571.5	20	38.1	1 3/8	215	220	220	133.30	106.69	127.00	167.00
18	13	628.6	24	38.1	1 3/8	220	230	230	158.90	129.39	156.49	206.57
20	13	685.8	24	41.1	1 1/2	235	240	250	193.00	152.00	190.51	261.00
24	13	812.8	24	47.8	1 3/4	260	265	280	281.48	231.54	278.96	395.00

(d) Blind flanges may be made with or without hubs at the manufacturer's option.

(e) Dimensions in B_1 correspond to the inside diameters of pipe as given in ASME B36.10M for Standard Wall pipe. Thickness of Standard Wall is the same as Schedule 40 in sizes NPS 10 and smaller. These bore sizes are furnished unless otherwise specified by the purchaser.

(f) Dimensions of sizes 1/2" through 3 1/2" are the same as for Class 600 flanges.

CLASS 600 FLANGES

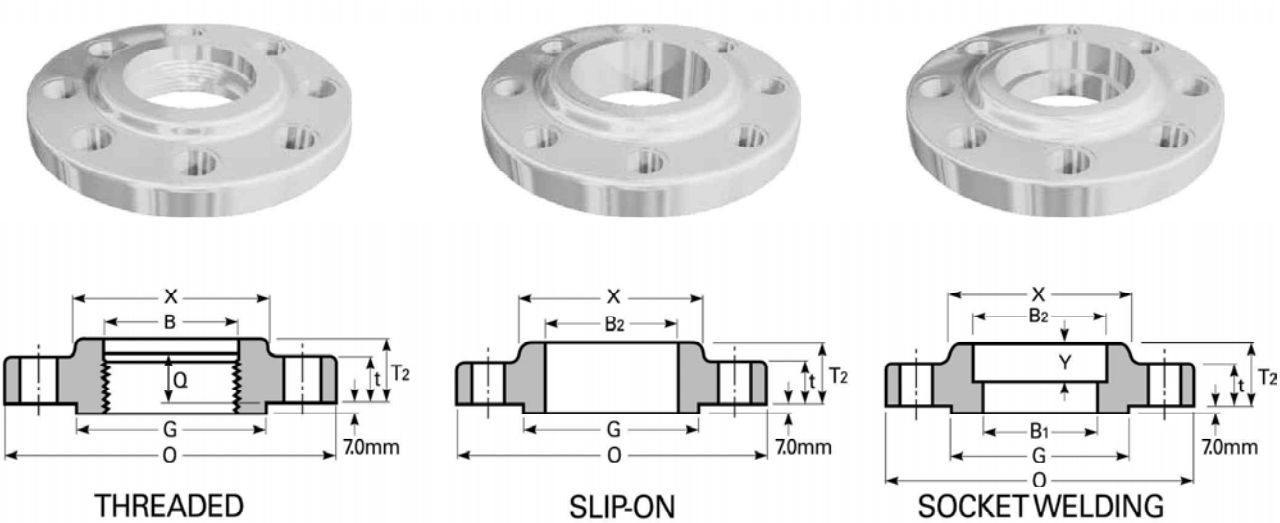

ASME B16.5-2003ED

Unit : mm

Nominal Pipe Size	Outside Diam.	Thickness	Diam. of Hub	O.D of Raised Face	Diam. of Hub at Bavel	Length Through Hub			Thread Length	BORE			
						Welding Neck	Slip-On Threaded Socket Welding	Lap Joint		Welding Neck /Socket Welding	Slip-On /Socket Welding	Lap Joint	Counter Bore Min. Threaded
	O	t	X	G	A	T_1	T_2	T_3	Q	B_1	B_2	B_3	B
1/2	95	14.3	38	35.1	21.3	52	22	22	16	To be Specified by Purchaser.	22.2	22.9	23.6
3/4	115	15.9	48	42.9	26.7	57	25	25	16		27.7	28.2	29.0
1	125	17.5	54	50.8	33.4	62	27	27	18		34.5	34.9	35.8
1 1/4	135	20.7	64	63.5	42.2	67	29	29	21		43.2	43.7	44.4
1 1/2	155	22.3	70	73.2	48.3	70	32	32	23		49.5	50.0	50.6
2	165	25.4	84	91.9	60.3	73	37	37	29		61.9	62.5	63.5
2 1/2	190	28.6	100	104.6	73.0	79	41	41	32		74.6	75.4	76.2
3	210	31.8	117	127.0	88.9	83	46	46	35		90.7	91.4	92.2
3 1/2	230	35.0	133	139.7	101.6	86	49	49	40		103.4	104.1	104.9
4	275	38.1	152	157.2	114.3	102	54	54	42		116.1	116.8	117.6
5	330	44.5	189	185.7	141.3	114	60	60	48		143.8	144.4	144.4
6	355	47.7	222	215.9	168.3	117	67	67	51		170.7	171.4	171.4
8	420	55.6	273	269.7	219.1	133	76	76	58		221.5	222.2	222.2
10	510	63.5	343	323.9	273.0	152	86	111	66		276.2	277.4	276.2
12	560	66.7	400	381.0	323.8	156	92	117	70		327.0	328.2	328.6
14	605	69.9	432	412.8	355.6	165	94	127	74		359.2	360.2	360.4
16	685	76.2	495	469.9	406.4	178	106	140	78		410.5	411.2	411.2
18	745	82.6	546	533.4	457.0	184	117	152	80		461.8	462.3	462.0
20	815	88.9	610	584.2	508.0	190	127	165	83		513.1	514.4	512.8
24	940	101.6	718	692.2	610.0	203	140	184	93		616.0	616.0	614.4

Notes :

(a) For the 'BORE' (B_1) other than Standard Wall Thickness, refer to page 54-55.

(b) These flanges may be supplied with a flat face. The flat face may be either the full t dimension of thickness plus 7mm, or the t dimension thickness without the raised face height.

(c) This dimension is for large end of hub, which may be straight or tapered. Taper shall not exceed 7 deg on threaded, slip-on, socket-welding, and lapped flanges. This dimension is defined as the diameter at the intersection between the hub taper and the back face of the flange.

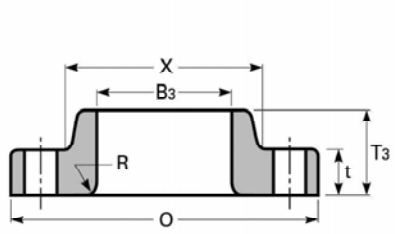

LAP JOINT

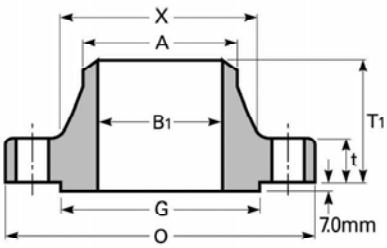

WELDING NECK

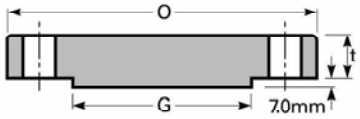

BLIND

Unit : mm

Nominal Pipe Size	Ridius of Fillet	Depth of Socket	DRILLING			BOLTING				APPROXIMATE WEIGHT(Kg)				
			Bolt Circle Diam.	Num. of Holes	Diam. of Holes	Diam. of Bolt (inch)	Stud Bolt Length			Welding Neck	Slip-On/ Threaded	Lap Joint	Blind	Socket Welding
							Male-Female Tongue-Groove	7mm Raised Face	Ring Joint					
	R	Y												
1/2	3	10	66.7	4	15.9	1/2	70	75	75	0.90	0.91	0.80	0.91	0.91
3/4	3	11	82.6	4	19.1	5/8	85	90	90	1.59	1.40	1.36	1.40	1.36
1	3	13	88.9	4	19.1	5/8	85	90	90	1.90	1.70	1.59	1.81	1.81
1 1/4	5	14	98.4	4	19.1	5/8	90	95	95	2.49	2.27	2.04	2.40	2.60
1 1/2	6	16	114.3	4	22.2	3/4	100	110	110	3.63	3.10	2.95	3.40	3.18
2	8	17	127.0	8	19.1	5/8	100	110	110	4.54	3.63	3.63	4.40	3.90
2 1/2	8	19	149.2	8	22.2	3/4	115	120	120	6.35	5.44	4.99	6.80	5.90
3	10	21	168.3	8	22.2	3/4	120	125	125	8.16	7.26	6.35	8.90	7.40
3 1/2	10	22.4	184.2	8	25.4	7/8	135	140	140	11.80	9.53	9.08	13.17	-
4	11	23.9	215.9	8	25.4	7/8	140	145	145	16.78	14.97	14.06	18.60	-
5	11	23.9	266.7	8	28.6	1	160	165	165	30.87	28.50	27.50	30.84	-
6	13	26.9	292.1	12	28.6	1	165	170	170	36.77	36.32	35.38	38.00	-
8	13	31.8	349.2	12	31.8	1 1/8	185	190	195	50.80	44.00	50.80	62.20	-
10	13	33.3	431.8	16	34.9	1 1/4	210	215	215	86.26	76.20	74.00	102.00	-
12	13	39.6	489.0	20	34.9	1 1/4	215	220	220	102.51	97.52	108.86	132.00	-
14	13	41.4	527.0	20	38.1	1 3/8	230	235	235	121.56	102.00	111.00	158.00	-
16	13	44.5	603.2	20	41.3	1 1/2	250	255	255	177.06	149.82	165.71	224.73	-
18	13	49.3	654.0	20	44.5	1 5/8	265	275	275	215.65	180.10	194.00	285.00	-
20	13	54.1	723.9	24	44.5	1 5/8	280	285	290	267.86	231.54	258.78	365.00	-
24	13	63.5	838.2	24	50.8	1 7/8	325	330	335	372.00	330.00	362.00	533.45	-

(d) Blind flanges may be made with or without hubs at the manufacturer's option.

(e) Dimensions in B_1 correspond to the inside diameters of pipe as given in ASME B36.10M for Standard Wall pipe. Thickness of Standard Wall is the same as Schedule 40 in sizes NPS 10 and smaller. These bore sizes are furnished unless otherwise specified by the purchaser.

(f) Depth of Socket(Y) is covered by ASME B16.5 only in sizes through 3 inch, over 3 inch is at the manufacture's option.

CLASS 900 FLANGES

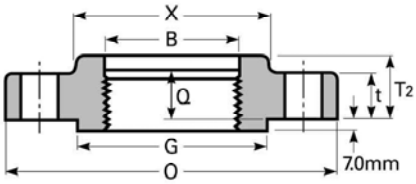

THREADED

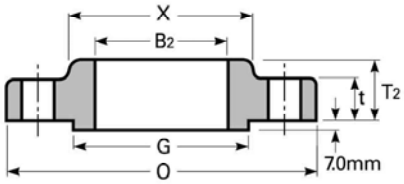

SLIP-ON

ASME B16.5-2003ED

Unit : mm

Nominal Pipe Size	Outside Diam.	Thick-ness	Diam. of Hub	O.D of Raised Face	Diam. of Hub at Bavel	Length Through Hub			Thread Length	BORE			
						Weld-ing Neck	Slip-On Threaded Socket Welding	Lap Joint		Welding Neck /Socket Welding	Slip-On /Socket-Welding	Lap Joint	Counter Bore Min. Threaded
	O	t	X	G	A	T_1	T_2	T_3	Q	B_1	B_2	B_3	B
1/2	120	22.3	38	35.1	21.3	60.0	32.0	32.0	23.0	To be Specified by Purchaser.	22.2	22.9	23.6
3/4	130	25.4	44	42.9	26.7	70.0	35.0	35.0	26.0		27.7	28.2	29.0
1	150	28.6	52	50.8	33.4	73.0	41.0	41.0	29.0		34.5	34.9	35.8
1 1/4	160	28.6	64	63.5	42.2	73.0	41.0	41.0	31.0		43.2	43.7	44.4
1 1/2	180	31.8	70	73.2	48.3	83.0	44.0	44.0	32.0		49.5	50.0	50.6
2	215	38.1	105	91.9	60.3	102.0	57.0	57.0	39.0		61.9	62.5	63.5
2 1/2	245	41.3	124	104.6	73.0	105.0	64.0	64.0	48.0		74.6	75.4	76.2
3	240	38.1	127	127.0	88.9	102.0	54.0	54.0	42.0		90.7	91.4	92.2
4	290	44.5	159	157.2	114.3	114.0	70.0	70.0	48.0		116.1	116.8	117.6
5	350	50.8	190	185.7	141.3	127.0	79.0	79.0	54.0		143.8	144.4	144.4
6	380	55.6	235	215.9	168.3	140.0	86.0	86.0	58.0		170.7	171.4	171.4
8	470	63.5	298	269.7	219.1	162.0	102.0	114.0	64.0		221.5	222.2	222.2
10	545	69.9	368	323.9	273.0	184.0	108.0	127.0	72.0		276.2	277.4	276.2
12	610	79.4	419	381.0	323.8	200.0	117.0	143.0	77.0		327.0	328.2	328.6
14	640	85.8	451	412.8	355.6	213.0	130.0	156.0	83.0		359.2	360.2	360.4
16	705	88.9	508	469.9	406.4	216.0	133.0	165.0	86.0		410.5	411.2	411.2
18	785	101.6	565	533.4	457.0	229.0	152.0	190.0	89.0		461.8	462.3	462.0
20	855	108.0	622	584.2	508.0	248.0	159.0	210.0	93.0		513.1	514.4	512.8
24	1040	139.7	749	692.2	610.0	292.0	203.0	267.0	102.0		616.0	616.0	614.4

Notes :

(a) For the 'BORE' (B_1) other than Standard Wall Thickness, refer to page 54-55.

(b) These flanges may be supplied with a flat face. The flat face may be either the full t dimension of thickness plus 7mm, or the t dimension thickness without the raised face height.

(c) This dimension is for large end of hub, which may be straight or tapered. Taper shall not exceed 7 deg on threaded, slip-on, socket-welding, and lapped flanges. This dimension is defined as the diameter at the intersection between the hub taper and the back face of the flange

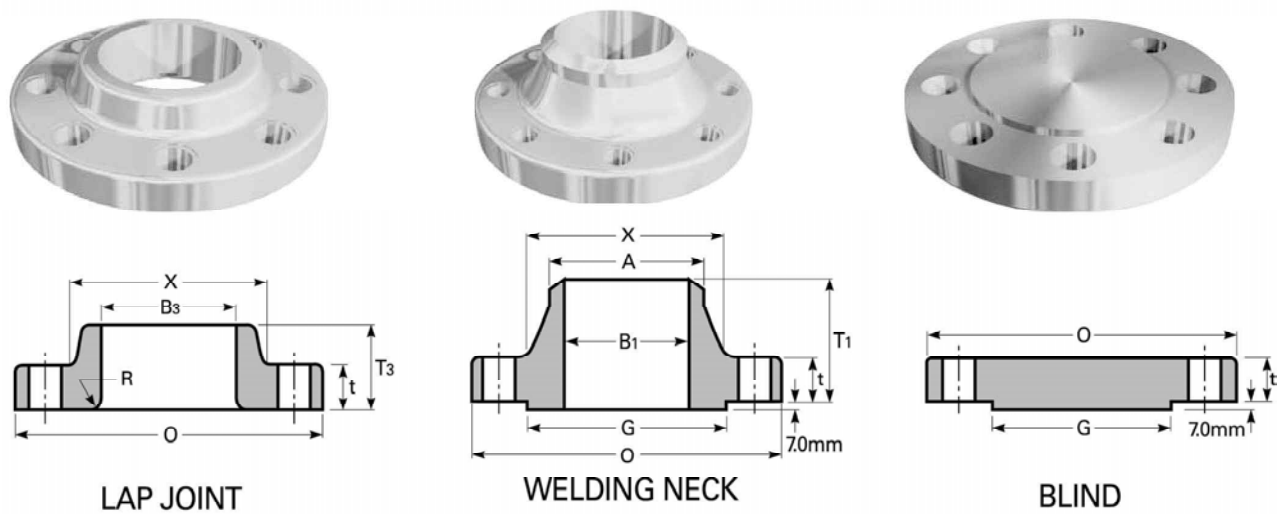

Unit : mm

Nominal Pipe Size	Ridius of Fillet R	DRILLING			BOLTING				APPROXIMATE WEIGHT(Kg)			
		Bolt Circle Diam.	Num. of Holes	Diam. of Holes	Diam. of Bolt (inch)	Stud Bolt Length: Male-Female Tongue-Groove	Stud Bolt Length: 7mm Raised Face	Stud Bolt Length: Ring Joint	Welding Neck	Slip-On/ Threaded	Lap Joint	Blind
1/2	3	82.6	4	22.2	3/4	100	110	110	2.10	1.81	1.81	1.90
3/4	3	88.9	4	22.2	3/4	110	115	115	2.72	2.40	2.30	2.70
1	3	101.6	4	25.4	7/8	120	125	125	3.86	3.41	3.40	4.09
1 1/4	5	111.1	4	25.4	7/8	120	125	125	4.54	4.10	4.09	4.54
1 1/2	6	123.8	4	28.6	1	135	140	140	5.90	5.45	5.40	5.90
2	8	165.1	8	25.4	7/8	140	145	145	10.89	9.98	9.53	11.34
2 1/2	8	190.5	8	28.6	1	150	160	160	16.33	15.80	13.15	16.00
3	10	190.5	8	25.4	7/8	140	145	145	15.00	11.80	11.34	13.17
4	11	235.0	8	31.8	1 1/8	165	170	170	23.13	23.20	22.60	24.50
5	11	279.4	8	34.9	1 1/4	185	190	190	38.50	37.65	36.74	39.46
6	13	317.5	12	31.8	1 1/8	185	190	195	49.89	48.30	47.50	51.50
8	13	393.7	12	38.1	1 3/8	215	220	220	79.45	75.00	86.00	89.00
10	13	469.9	16	38.1	1 3/8	230	235	235	118.04	111.13	125.64	131.54
12	13	533.4	20	38.1	1 3/8	250	255	255	157.00	146.00	167.00	187.00
14	13	558.8	20	41.3	1 1/2	265	275	280	181.60	172.36	180.07	224.07
16	13	616.0	20	44.5	1 5/8	280	285	290	224.73	192.95	211.11	272.40
18	13	685.8	20	50.8	1 7/8	320	325	335	308.72	272.40	295.10	385.90
20	13	749.3	20	54.0	2	345	350	360	376.82	331.42	367.74	488.00
24	13	901.7	20	66.7	2 1/2	430	440	455	685.00	632.00	700.00	905.00

(d) Blind flanges may be made with or without hubs at the manufacturer's option.
(e) Dimensions in B_1 correspond to the inside diameters of pipe as given in ASME B36.10M for Standard .

CLASS 1500 FLANGES

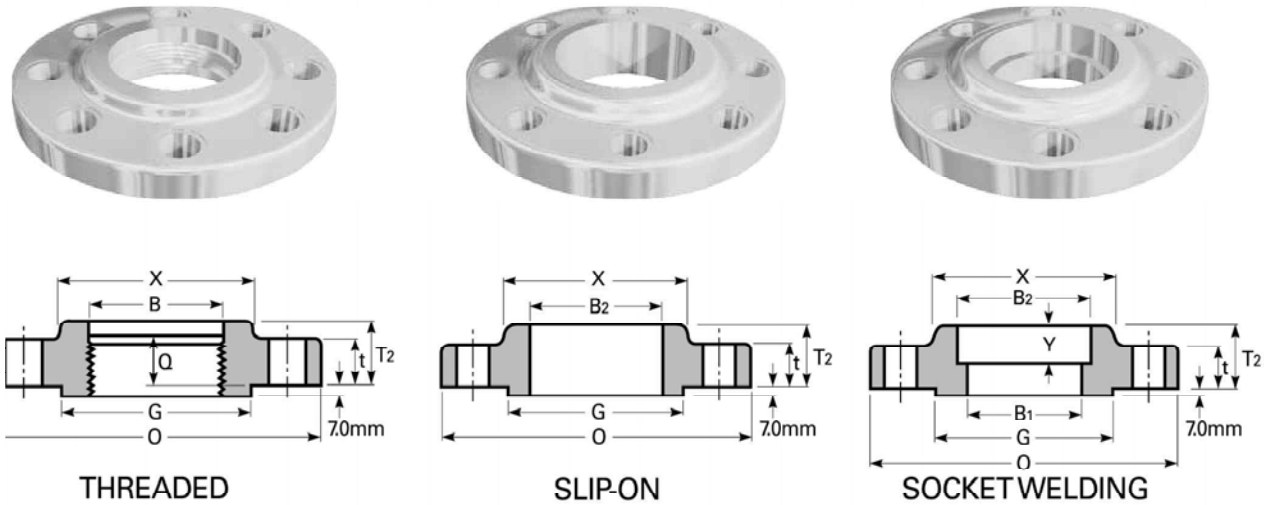

ASME B16.5-2003ED

Nominal Pipe Size	Outside Diam.	Thick-ness	Diam. of Hub	O.D of Raised Face	Diam. of Hub at Bavel	Length Through Hub			Thread Length	BORE			
						Weld-ing Neck	Slip-On Threaded Socket Welding	Lap Joint		Welding Neck Socket-Welding	Slip-On Socket-Welding	Lap Joint	Counter Bore Min. Threaded
	O	t	X	G	A	T_1	T_2	T_3	Q	B_1	B_2	B_3	B
1/2	120	22.3	38	35.1	21.3	60	32	32	23	To be Specified by Purchaser.	22.2	22.9	23.6
3/4	130	25.4	44	42.9	26.7	70	35	35	26		27.7	28.2	29.0
1	150	28.6	52	50.8	33.4	73	41	41	29		34.5	34.9	35.8
1 1/4	160	28.6	64	63.5	42.2	73	41	41	31		43.2	43.7	44.4
1 1/2	180	31.8	70	73.2	48.3	83	44	44	32		49.5	50.0	50.6
2	215	38.1	105	91.9	60.3	102	57	57	39		61.9	62.5	63.5
2 1/2	245	41.3	124	104.6	73.0	105	64	64	48		74.6	75.4	76.2
3	265	47.7	133	127.0	88.9	117	73.2	73	50.8		90.7	91.4	92.2
4	310	54.0	162	157.2	114.3	124	90.4	90	57.2		116.1	116.8	117.6
5	375	73.1	197	185.7	141.3	156	104.6	105	57.2		143.8	144.4	144.5
6	395	82.6	229	215.9	168.3	171	119.1	119	69.9		170.7	171.4	171.5
8	485	92.1	292	269.7	219.1	213	142.7	143	76.2		221.5	222.2	222.3
10	585	108.0	368	323.9	273.0	254	158.8	178	84.1		276.4	277.4	276.4
12	675	123.9	451	381.0	323.8	283	180.8	219	91.9		327.2	328.2	328.7
14	750	133.4	495	412.8	355.6	298	-	241	-		359.2	360.2	360.4
16	825	146.1	552	469.9	406.4	311	-	260	-		410.5	411.2	411.2
18	915	162.0	597	533.4	457.0	327	-	276	-		461.8	462.3	462.0
20	985	177.8	641	584.2	508.0	356	-	292	-		513.1	514.4	512.8
24	1170	203.2	762	692.2	610.0	406	-	330	-		616.0	616.0	614.4

Notes :

(a) For the 'BORE' (B_1) other than Standard Wall Thickness, refer to page 54-55.

(b) These flanges may be supplied with a flat face. The flat face may be either the full t dimension of thickness plus 7mm, or the t dimension thickness without the raised face height.

(c) This dimension is for large end of hub, which may be straight or tapered. Taper shall not exceed 7 deg on threaded, slip-on, socket-welding, and lapped flanges. This dimension is defined as the diameter at the intersection between the hub taper and the back face of the flange.

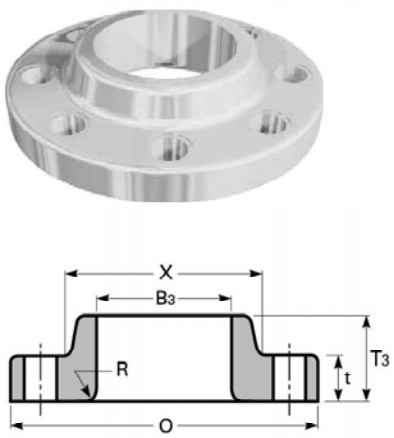

LAP JOINT

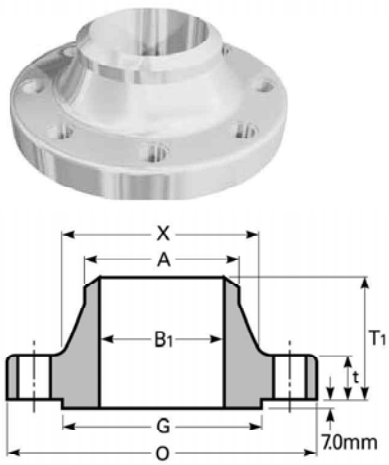

WELDING NECK

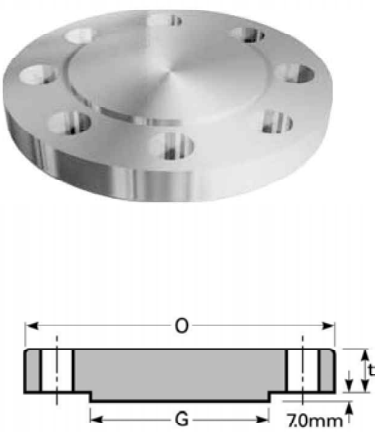

BLIND

Unit : mm

Nominal Pipe Size	Ridius of Fillet	Depth of Socket	DRILLING			BOLTING				APPROXIMATE WEIGHT(Kg)				
			Bolt Circle Diam.	Num. of Holes	Diam. of Holes	Diam. of Bolt (inch)	Male and Female/ Tongue and Groove	Stud Bolt Length		Welding Neck	Slip-On/ Thre-aded	Lap Joint	Blind	Socket Wel-ding
								7mm Raised Face	Ring Joint					
	R	Y												
1/2	3	10	82.6	4	22.2	3/4	100	110	110	2.10	1.80	1.80	1.90	1.81
3/4	3	11	88.9	4	22.2	3/4	110	115	115	2.72	2.27	2.27	2.72	2.81
1	3	13	101.6	4	25.4	7/8	120	125	125	3.86	3.40	3.40	4.08	3.61
1 1/4	5	14	111.1	4	25.4	7/8	120	125	125	4.54	4.10	4.09	4.30	4.99
1 1/2	6	16	123.8	4	28.6	1	135	140	140	5.90	5.45	5.40	5.90	6.76
2	8	17	165.1	8	25.4	7/8	140	145	145	10.89	10.50	9.53	11.30	10.89
2 1/2	8	19	190.5	8	28.6	1	150	160	160	16.34	15.80	13.15	16.00	16.34
3	10	20.6	203.2	8	31.8	1 1/8	170	180	180	21.79	21.77	17.24	21.79	-
4	11	23.9	241.3	8	34.9	1 1/4	190	195	195	31.30	31.00	29.00	33.11	-
5	11	23.9	292.1	8	41.3	1 1/2	240	250	250	59.02	58.80	54.00	60.00	-
6	13	26.9	317.5	12	38.1	1 3/8	255	260	265	74.91	74.00	62.00	75.00	-
8	13	31.8	393.7	12	44.5	1 5/8	285	290	325	123.83	117.73	129.73	136.98	-
10	13	33.3	482.6	12	50.8	1 7/8	330	335	345	205.93	197.49	220.19	229.97	-
12	13	39.6	571.5	16	54.0	2	370	375	385	306.00	264.00	286.02	316.00	-
14	13	41.4	635.0	16	60.3	2 1/4	400	405	425	416.00	-	404.06	421.00	-
16	13	44.5	704.8	16	66.7	2 1/2	440	445	470	567.50	-	522.10	559.00	-
18	13	49.3	774.7	16	73.0	2 3/4	490	495	525	736.00	-	669.65	761.00	-
20	13	54.1	831.8	16	79.4	3	535	540	565	929.00	-	805.85	967.00	-
24	13	63.5	990.6	16	92.1	3 1/2	610	615	650	1504.00	-	1285.55	1568.00	-

(d) Blind flanges may be made with or without hubs at the manufacturer's option.

(e) Dimensions in B_1 correspond to the inside diameters of pipe as given in ASME B36.10M for Standard Wall pipe. Thickness of Standard Wall is the same as Schedule 40 in sizes NPS 10 and smaller. These bore sizes are furnished unless otherwise specified by the purchaser.

(f) Depth of Socket(Y) is covered by ASME B16.5 only in sizes through 3 inch, over 3 inch is at the manufacture's option.

(g) Dimensions of sizes 1/2" through 2 1/2" are the same as for Class 900 flanges.

(h) Over 2 1/2 inch of Bore(B, B_2) and Thread Length(Q) are at the manufacture's option.

CLASS 2500 FLANGES

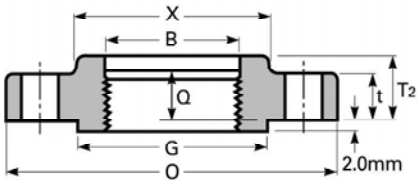

THREADED

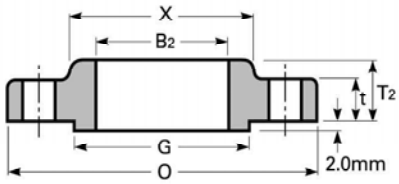

SLIP-ON

ASME B16.5-2003ED

Unit : mm

Nominal Pipe Size	Outside Diam.	Thick-ness	Diam. of Hub	O.D of Raised Face	Diam. of Hub at Bavel	Length Through Hub			Thread Length	BORE		
						Weld-ing Neck	Slip-On Threaded Socket Welding	Lap Joint		Welding Neck /Socket Welding	Lap Joint	Counter Bore Min. Threaded
	O	t	X	G	A	T_1	T_2	T_3	Q	B_1	B_3	B
1/2	135	30.2	43	35.1	21.3	73	40	40	29	To be Specified by Purchaser.	22.9	23.6
3/4	140	31.8	51	42.9	26.7	79	43	43	32		28.2	29.0
1	160	35.0	57	50.8	33.4	89	48	48	35		34.9	35.8
1 1/4	185	38.1	73	63.5	42.2	95	52	52	39		43.7	44.4
1 1/2	205	44.5	79	73.2	48.3	111	60	60	45		50.0	50.6
2	235	50.9	95	91.9	60.3	127	70	70	51		62.5	63.5
2 1/2	265	57.2	114	104.6	73.0	143	79	79	58		75.4	76.2
3	305	66.7	133	127.0	88.9	168	-	92	63.5		91.4	-
4	355	76.2	165	157.2	114.3	190	-	108	69.9		116.8	-
5	420	92.1	203	185.7	141.3	229	-	130	76.2		144.4	-
6	485	108.0	235	215.9	168.3	273	-	152	82.6		171.4	-
8	550	127.0	305	269.7	219.1	318	-	178	95.3		222.2	-
10	675	165.1	375	323.9	273.0	419	-	229	108.0		277.4	-
12	760	184.2	441	381.0	323.8	464	-	254	120.7		328.2	-

Notes :

(a) For the 'BORE' (B_1) other than Standard Wall Thickness, refer to page 54-55.

(b) These flanges may be supplied with a flat face. The flat face may be either the full t dimension of thickness plus 7mm, or the t dimension thickness without the raised face height.

(c) This dimension is for large end of hub, which may be straight or tapered. Taper shall not exceed 7 deg on threaded, slip-on, socket-welding, and lapped flanges. This dimension is defined as the diameter at the intersection between the hub taper and the back face of the flange.

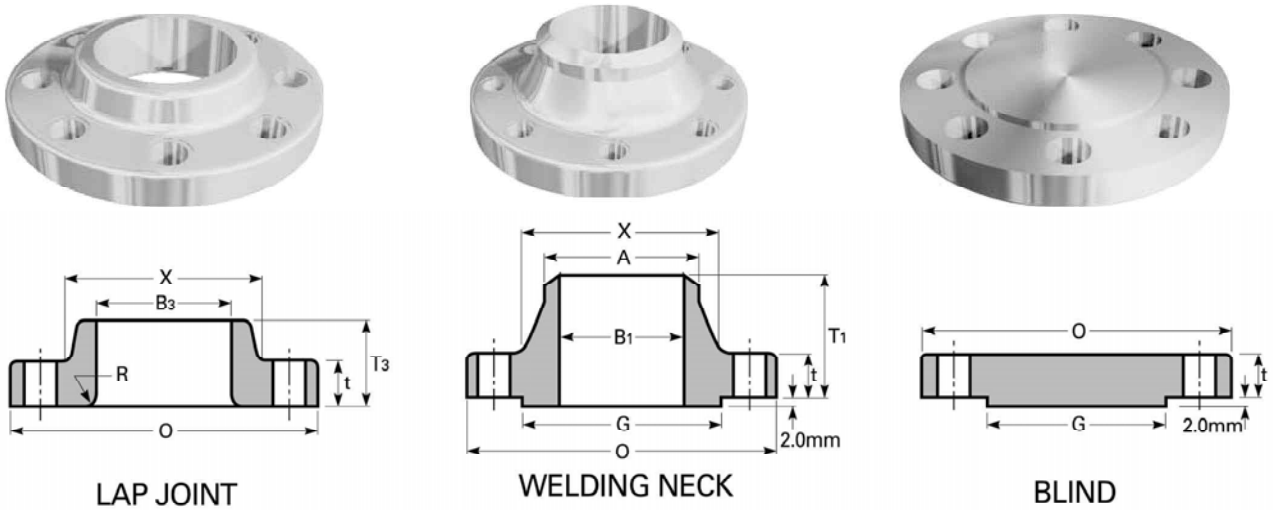

Unit : mm

Nominal Pipe Size	Ridius of Fillet	DRILLING			BOLTING				APPROXIMATE WEIGHT(Kg)			
		Bolt Circle Diam.	Num. of Holes	Diam. of Holes	Diam. of Bolt (inch)	Male and Female/ Tongue and Groove	Stud Bolt Length		Welding Neck	Slip-On/ Thre-aded	Lap Joint	Blind
	R						7mm Raised Face	Ring Joint				
1/2	3.0	88.9	4	22.2	3/4	115	120	120	3.18	3.18	3.00	3.18
3/4	3.0	95.2	4	22.2	3/4	120	125	125	4.08	4.08	3.63	4.54
1	3.0	108.0	4	25.4	7/8	135	140	140	5.45	5.44	4.99	5.44
1 1/4	5.0	130.2	4	28.6	1	145	150	150	9.07	8.16	7.26	8.16
1 1/2	6.0	146.0	4	31.8	1 1/8	165	170	170	11.35	11.00	9.99	10.44
2	8.0	171.4	8	28.6	1	170	180	180	19.07	17.25	16.80	17.71
2 1/2	8.0	196.8	8	31.8	1 1/8	190	195	205	23.61	24.97	24.06	25.42
3	10.0	228.6	8	34.9	1 1/4	215	220	230	42.68	37.68	36.32	39.04
4	11.0	273.0	8	41.3	1 1/2	250	255	260	64.00	58.00	54.48	60.38
5	11.0	323.8	8	47.6	1 3/4	290	300	310	110.68	95.25	92.53	101.15
6	13.0	368.3	8	54.0	2	335	345	355	176.46	146.51	143.01	156.63
8	13.0	438.2	12	54.0	2	375	380	395	261.27	219.99	213.38	240.62
10	13.0	539.8	12	66.7	2 1/2	485	490	510	484.43	419.57	408.60	465.36
12	13.0	619.1	12	73.0	2 3/4	535	540	560	692.35	590.20	572.95	664.06

(d) Blind flanges may be made with or without hubs at the manufacturer's option.

(e) Dimensions in B_1 correspond to the inside diameters of pipe as given in ASME B36.10M for Standard Wall pipe. Thickness of Standard Wall is the same as Schedule 40 in sizes NPS 10 and smaller. These bore sizes are furnished unless otherwise specified by the purchaser.

(f) Class 2500 Slip-on are not by ASME B16.5, Slip-on flanges are at the manufacture's option.

(g) Thread Length(Q) and Length Through Hub(T_3) are covered by ASME B16.5 only in sizes through 2 1/2 inch, over 2 1/2 inch is at the manufacture's option.

ANSI B16.5-2010

Ring Joint Flanges

- Class 150 Flanges
- Class 300, 400, 600 Flanges
- Class 900 Flanges
- Class 1500 Flanges
- Class 2500 Flanges

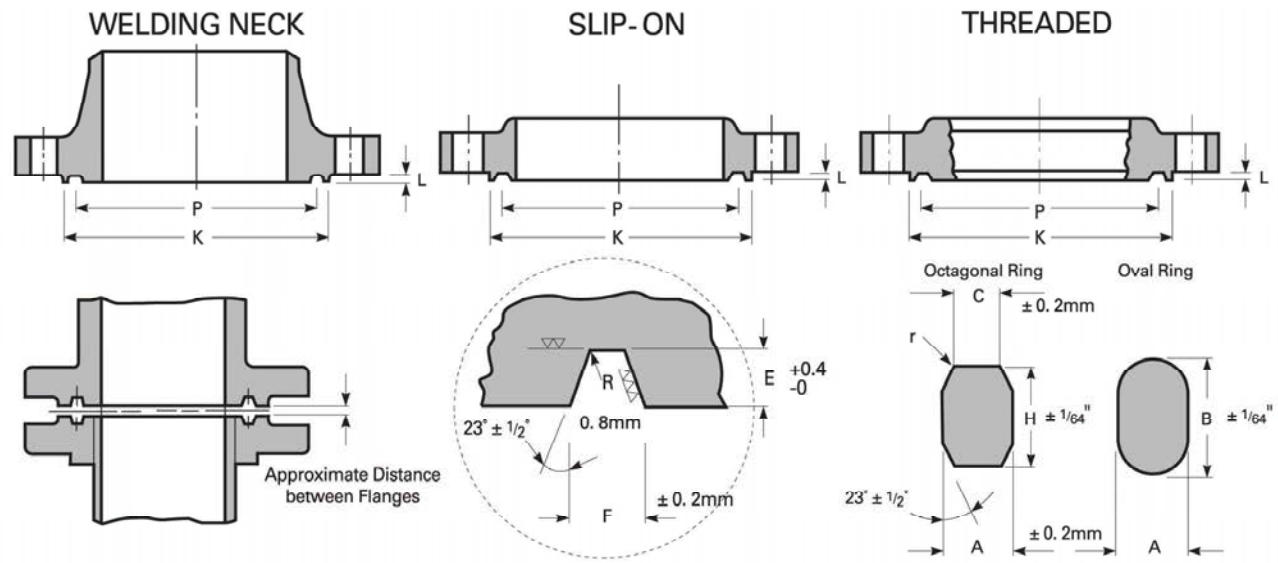

RING JOINT FLANGES FACING DIMENSIONS

Unit : mm

Nominal Pipe Size	Pitch Diam. Ring & Groove	Width of Ring	Height of Ring		Width Flat on Octa. Ring	Width of Groove	Depth of Groove	Diam. of R.F for Ring Joint or Lapped	Ring Number	Approximate Distance Between Flanges
			Oval	Octagonal						
	P	A	B	H	C	F	E(L*)	K(Min)		
1	47.6	8	14.3	12.7	5.2	8.7	6.4	63.5	R15	4
1 1/4	57.2	8	14.3	12.7	5.2	8.7	6.4	73.0	R17	4
1 1/2	65.1	8	14.3	12.7	5.2	8.7	6.4	82.5	R19	4
2	82.6	8	14.3	12.7	5.2	8.7	6.4	102.0	R22	4
2 1/2	101.6	8	14.3	12.7	5.2	8.7	6.4	121.0	R25	4
3	114.3	8	14.3	12.7	5.2	8.7	6.4	133.0	R29	4
3 1/2	131.8	8	14.3	12.7	5.2	8.7	6.4	154.0	R33	4
4	149.2	8	14.3	12.7	5.2	8.7	6.4	171.0	R36	4
5	171.5	8	14.3	12.7	5.2	8.7	6.4	194.0	R40	4
6	193.7	8	14.3	12.7	5.2	8.7	6.4	219.0	R43	4
8	247.7	8	14.3	12.7	5.2	8.7	6.4	273.0	R48	4
10	304.8	8	14.3	12.7	5.2	8.7	6.4	330.0	R52	4
12	381.0	8	14.3	12.7	5.2	8.7	6.4	406.0	R56	4
14	396.9	8	14.3	12.7	5.2	8.7	6.4	425.0	R59	3
16	454.0	8	14.3	12.7	5.2	8.7	6.4	483.0	R64	3
18	517.5	8	14.3	12.7	5.2	8.7	6.4	546.0	R68	3
20	558.8	8	14.3	12.7	5.2	8.7	6.4	597.0	R72	3
24	673.1	8	14.3	12.7	5.2	8.7	6.4	711.0	R76	3

Notes :

(Unless otherwise specified by the customer, Ring Type Joint Flanges will be furnished in accordance with these details. The depth of groove is added to the minimum flanges thickness.

* Raised face "L" is equal to groove dimension "E" but is not subject to tolerance for "E"
* A plus tolerance of 3/64 in. for heights B and H is permitted providing the variation in the height of any given ring does not exceed 1/64 in. throughout its entire circumference.
  Dimension "R" is max.
  Radius "r" is 1/16" for ring widths 7/8" and less 3/32" for ring width 1" and over.

TOLERANCES :

- E (depth) +0.4, −0.0
- F (width) ±0.2
- P (pitch diameter) ±0.13
- R (radius at bottom)
  R ≤ 2 +0.8, −0.0
  R > 2 ±0.8
- 23 deg (angle) ± 1/2 deg

CLASS 300 / 400 / 600 FLANGES

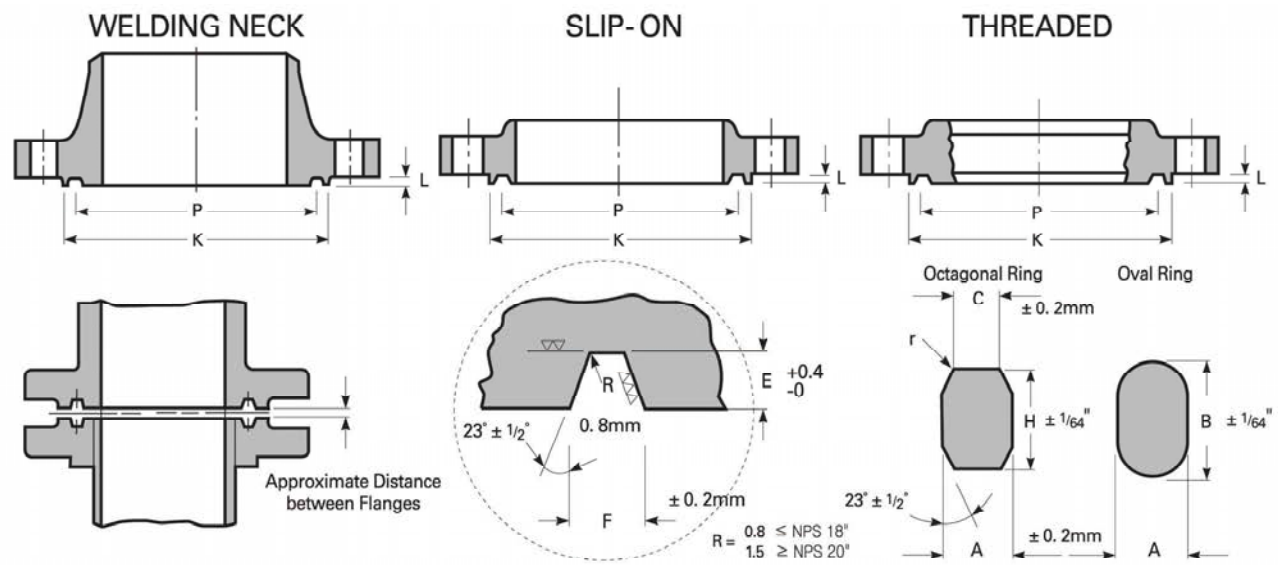

RING JOINT FLANGES FACING DIMENSIONS

Unit : mm

Nominal Pipe Size	Pitch Diam. Ring & Groove	Width of Ring	Height of Ring		Width Flat on Octa. Ring	Width of Groove	Depth of Groove	Diam. of R.F for Ring Joint or Lapped	Ring Number	Approximate Distance Between Flanges		
			Oval	Octagonal								
	P	A	B	H	C	F	E(L*)	K(Min)		CLASS 300	CLASS 400	CLASS 600
1/2	34.1	6.4	11.1	9.5	4.3	7.1	5.5	51.0	R11	3		3
3/4	42.9	8.0	14.3	12.7	5.2	8.7	6.4	63.5	R13	4		4
1	50.8	8.0	14.3	12.7	5.2	8.7	6.4	70.0	R16	4		4
1 1/4	60.3	8.0	14.3	12.7	5.2	8.7	6.4	79.2	R18	4		4
1 1/2	68.3	8.0	14.3	12.7	5.2	8.7	6.4	90.5	R20	4		4
2	82.6	11.1	17.5	15.9	7.7	11.9	7.9	108.0	R23	6		5
2 1/2	101.6	11.1	17.5	15.9	7.7	11.9	7.9	127.0	R26	6		5
3	123.8	11.1	17.5	15.9	7.7	11.9	7.9	146.0	R31	6		5
3 1/2	131.8	11.1	17.5	15.9	7.7	11.9	7.9	159.0	R34	6		5
4	149.2	11.1	17.5	15.9	7.7	11.9	7.9	175.0	R37	6	6	5
5	181.0	11.1	17.5	15.9	7.7	11.9	7.9	210.0	R41	6	6	5
6	211.1	11.1	17.5	15.9	7.7	11.9	7.9	241.0	R45	6	6	5
8	269.9	11.1	17.5	15.9	7.7	11.9	7.9	302.0	R49	6	6	5
10	323.9	11.1	17.5	15.9	7.7	11.9	7.9	356.0	R53	6	6	5
12	381.0	11.1	17.5	15.9	7.7	11.9	7.9	413.0	R57	6	6	5
14	419.1	11.1	17.5	15.9	7.7	11.9	7.9	457.0	R61	6	6	5
16	469.9	11.1	17.5	15.9	7.7	11.9	7.9	508.0	R65	6	6	5
18	533.4	11.1	17.5	15.9	7.7	11.9	7.9	575.0	R69	6	6	5
20	584.2	12.7	19.1	17.5	8.7	13.5	9.5	635.0	R73	6	6	5
24	692.2	15.9	22.2	20.7	10.5	16.7	11.1	749.0	R77	6	6	6

Notes :

Unless otherwise specified by the customer, Ring Type Joint Flanges will be furnished in accordance with these details. The depth of groove is added to the minimum flanges thickness.

* Raised face "L" is equal to groove dimension "E" but is not subject to tolerance for "E"
* A plus tolerance of 3/64 in. for heights B and H is permitted providing the variation in the height of any given ring does not exceed 1/64 in. throughout its entire circumference.

Dimension "R" is max.

Radius "r" is 1/16" for ring widths 7/8" and less 3/32" for ring width 1" and over.

TOLERANCES :

- E (depth) +0.4, −0.0
- F (width) ±0.2
- P (pitch diameter) ±0.13
- R (radius at bottom)
  - R ≤ 2 +0.8, −0.0
  - R > 2 ±0.8
- 23 deg (angle) ± 1/2 deg

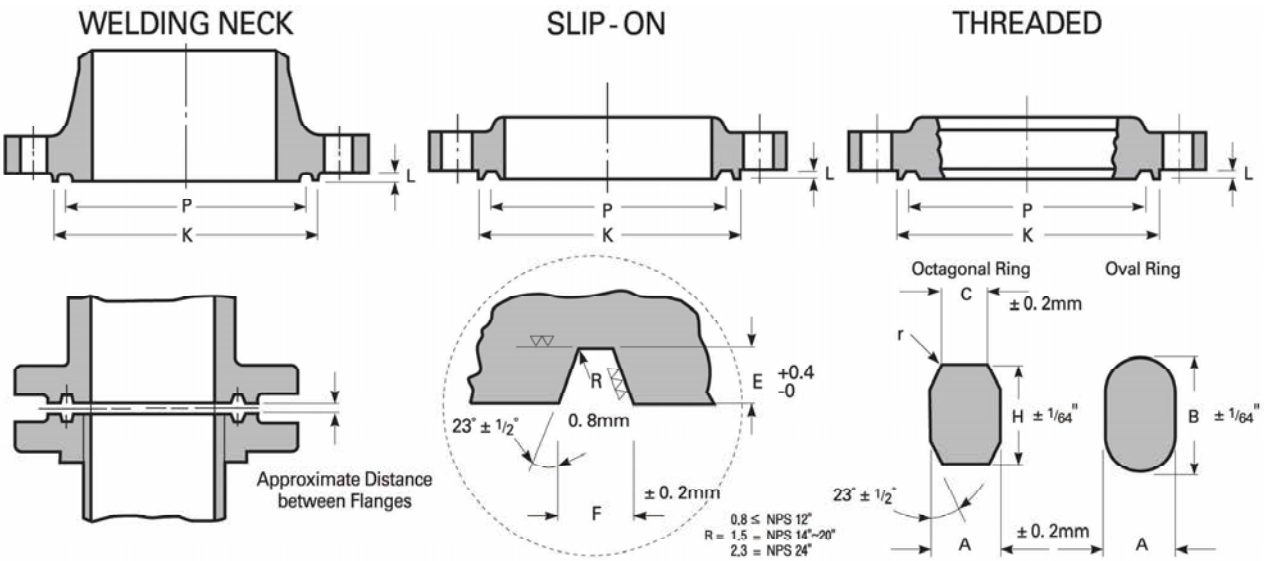

RING JOINT FLANGES FACING DIMENSIONS

Unit : mm

Nominal Pipe Size	Pitch Diam. Ring & Groove	Width of Ring	Height of Ring		Width Flat on Octa. Ring	Width of Groove	Depth of Groove	Diam. of R.F for Ring Joint or Lapped	Ring Number	Approximate Distance Between Flanges
			Oval	Octagonal						
	P	A	B	H	C	F	E(L*)	K(Min)		
1/2	39.7	8.0	14.3	12.7	5.2	8.74	6.35	60.5	R12	4
3/4	44.5	8.0	14.3	12.7	5.2	8.74	6.35	66.5	R14	4
1	50.8	8.0	14.3	12.7	5.2	8.74	6.35	71.5	R16	4
1 1/4	60.3	8.0	14.3	12.7	5.2	8.74	6.35	81.0	R18	4
1 1/2	68.3	8.0	14.3	12.7	5.2	8.74	6.35	92.0	R20	4
2	95.3	11.1	17.5	15.9	7.7	11.91	7.92	124.0	R24	3
2 1/2	108.0	11.1	17.5	15.9	7.7	11.91	7.92	136.7	R27	3
3	123.8	11.1	17.5	15.9	7.7	11.9	7.9	156.0	R31	4
4	149.2	11.1	17.5	15.9	7.7	11.9	7.9	181.0	R37	4
5	181.0	11.1	17.5	15.9	7.7	11.9	7.9	216.0	R41	4
6	211.1	11.1	17.5	15.9	7.7	11.9	7.9	241.0	R45	4
8	269.9	11.1	17.5	15.9	7.7	11.9	7.9	308.0	R49	4
10	323.9	11.1	17.5	15.9	7.7	11.9	7.9	362.0	R53	4
12	381.0	11.1	17.5	15.9	7.7	11.9	7.9	419.0	R57	4
14	419.1	15.9	22.2	20.7	10.5	16.7	11.1	467.0	R62	4
16	469.9	15.9	22.2	20.7	10.5	16.7	11.1	524.0	R66	4
18	533.4	19.1	25.4	23.8	11.1	19.8	12.7	594.0	R70	5
20	584.2	19.1	25.4	23.8	12.3	19.8	12.7	648.0	R74	5
24	692.2	25.4	33.4	31.8	17.3	27.0	15.9	772.0	R78	6

Notes :

Unless otherwise specified by the customer. Ring Type Joint Flanges will be furnished in accordance with these details. The depth of groove is added to the minimum flanges thickness.

* Raised face "L" is equal to groove dimension "E" but is not subject to tolerance for "E"
* A plus tolerance of 3/64 in. for heights B and H is permitted providing the variation in the height of any given ring does not exceed 1/64 in. throughout its entire circumference.
  Dimension "R" is max.
  Radius "r" is 1/16" for ring widths 7/8" and less 3/32" for ring width 1" and over.

TOLERANCES :

- E (depth) +0.4. −0.0
- F (width) ±0.2
- P (pitch diameter) ±0.13
- R (radius at bottom)
  R ≤ 2 +0.8, −0.0
  R > 2 ±0.8
- 23 deg (angle) ± 1/2 deg

CLASS 1500 FLANGES

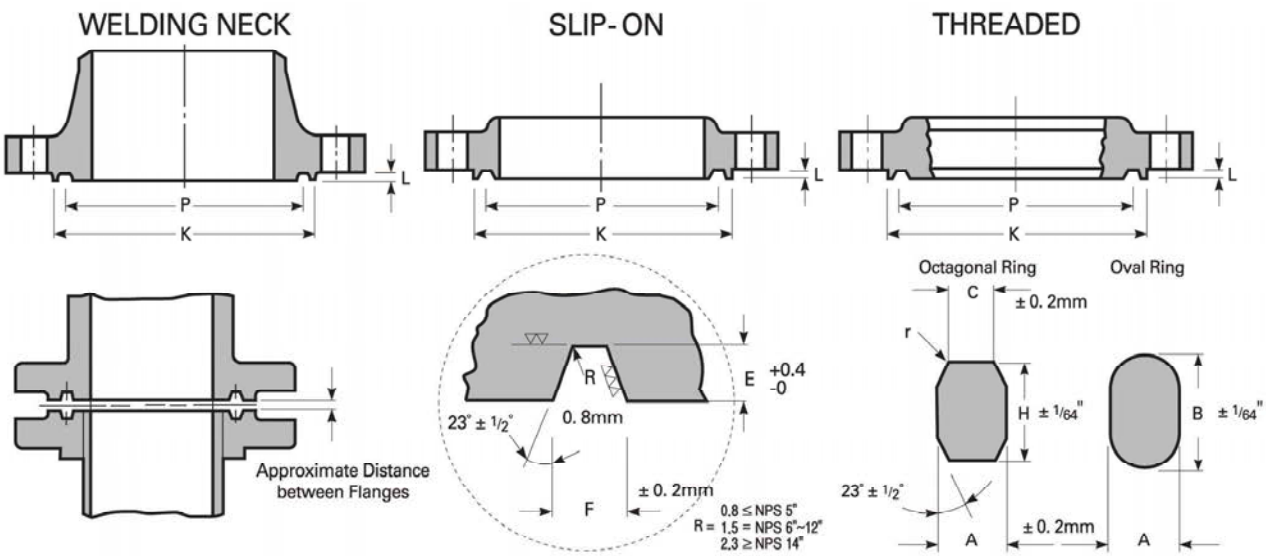

RING JOINT FLANGES FACING DIMENSIONS

Unit : mm

Nominal Pipe Size	Pitch Diam. Ring & Groove	Width of Ring	Height Of Ring		Width Flat on Octa. Ring	Width of Groove	Depth of Groove	Diam. of R.F for Ring Joint or Lapped	Ring Number	Approximate Distance Between Flanges
			Oval	Octagonal						
	P	**A**	**B**	**H**	**C**	**F**	**E(L*)**	**K(Min)**		
1/2	39.7	8.0	14.3	12.7	5.2	8.74	6.35	60.5	R12	4
3/4	44.5	8.0	14.3	12.7	5.2	8.74	6.35	66.5	R14	4
1	50.8	8.0	14.3	12.7	5.2	8.74	6.35	71.5	R16	4
1 1/4	60.3	8.0	14.3	12.7	5.2	8.74	6.35	81.0	R18	4
1 1/2	68.3	8.0	14.3	12.7	5.2	8.74	6.35	92.0	R20	4
2	95.3	11.1	17.5	15.9	7.7	11.91	7.92	124.0	R24	3
2 1/2	108.0	11.1	17.5	15.9	7.7	11.91	7.92	137.0	R27	3
3	136.5	11.1	17.5	15.9	7.7	11.91	7.92	168.0	R35	3
4	161.9	11.1	17.5	15.9	7.7	11.91	7.92	194.0	R39	3
5	193.7	11.1	17.5	15.9	7.7	11.91	7.92	229.0	R44	3
6	211.1	12.7	19.1	17.5	8.7	13.49	9.53	248.0	R46	3
8	269.9	15.9	22.2	20.7	10.5	16.67	11.13	318.0	R50	4
10	323.9	15.9	22.2	20.7	10.5	16.67	11.13	371.0	R54	4
12	381.0	22.2	28.6	27.0	14.8	23.01	14.27	438.0	R58	5
14	419.1	25.4	33.4	31.8	17.3	27.00	15.88	489.0	R63	6
16	469.9	28.6	36.5	34.9	19.8	30.18	17.48	546.0	R67	8
18	533.4	28.6	36.5	34.9	19.8	30.18	17.48	613.0	R71	8
20	584.2	31.8	39.7	38.1	22.3	33.32	17.48	673.0	R75	10
24	692.2	34.9	44.5	41.3	24.8	36.53	20.62	794.0	R79	11

Notes :

Unless otherwise specified by the customer, Ring Type Joint Flanges will be furnished in accordance with these details. The depth of groove is added to the minimum flanges thickness.

* Raised face "L" is equal to groove dimension "E" but is not subject to tolerance for "E"
* A plus tolerance of 3/64 in. for heights B and H is permitted providing the variation in the height of any given ring does not exceed 1/64 in. throughout its entire circumference.
  Dimension "R" is max.
  Radius "r" is 1/16" for ring widths 7/8" and less 3/32" for ring width 1" and over.

TOLERANCES :

- E (depth) +0.4, −0.0
- F (width) ±0.2
- P (pitch diameter) ±0.13
- R (radius at bottom)
  R ≤ 2 +0.8, −0.0
  R > 2 ±0.8
- 23 deg (angle) ± 1/2 deg

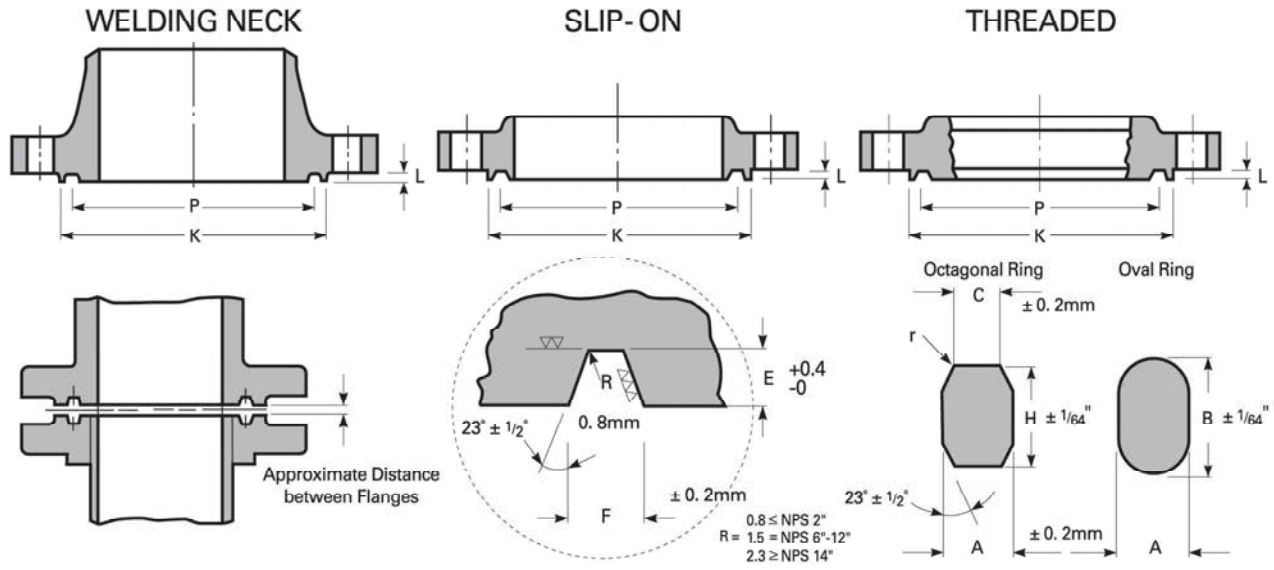

RING JOINT FLANGES FACING DIMENSIONS

Unit : mm

Nominal Pipe Size	Pitch Diam. Ring & Groove	Width of Ring	Height of Ring		Width Flat on Octa. Ring	Width of Groove	Depth of Groove	Diam. Of R.F for Ring Joint or Lapped	Ring Number	Approximate Distance Between Flanges
			Oval	Octagonal						
	P	A	B	H	C	F	E(L*)	K(Min)		
1/2	42.9	8.0	14.3	12.7	5.2	8.7	6.4	65.0	R13	13
3/4	50.8	8.0	14.3	12.7	5.2	8.7	6.4	73.0	R16	16
1	60.3	8.0	14.3	12.7	5.2	8.7	6.4	82.5	R18	18
1 1/4	72.2	11.1	17.5	15.9	7.7	11.9	7.9	102.0	R21	21
1 1/2	82.6	11.1	17.5	15.9	7.7	11.9	7.9	114.0	R23	23
2	101.6	11.1	17.5	15.9	7.7	11.9	7.9	133.0	R26	26
2 1/2	111.1	12.7	19.1	17.5	8.7	13.5	9.5	149.0	R28	28
3	127.0	12.7	19.1	17.5	8.7	13.5	9.5	168.0	R32	32
4	157.2	15.9	22.2	20.7	10.5	16.7	11.1	203.0	R38	38
5	190.5	19.1	25.4	23.8	12.3	19.8	12.7	241.0	R42	42
6	228.6	19.1	25.4	23.8	12.3	19.8	12.7	279.0	R47	47
8	279.4	22.2	28.6	27.0	14.8	23.0	14.3	340.0	R51	51
10	342.9	28.6	36.5	34.9	19.8	30.2	17.5	425.0	R55	55
12	406.4	31.8	39.7	38.1	22.3	33.3	17.5	495.0	R60	60

Notes :

Unless otherwise specified by the customer, Ring Type Joint Flanges will be furnished in accordance with these details. The depth of groove is added to the minimum flanges thickness.

* Raised face "L" is equal to groove dimension "E" but is not subject to tolerance for "E"
* A plus tolerance of 3/64 in. for heights B and H is permitted providing the variation in the height of any given ring does not exceed 1/64 in. throughout its entire circumference.
  Dimension "R" is max.
  Radius "r" is 1/16" for ring widths 7/8" and less 3/32" for ring width 1" and over.

TOLERANCES :

- E (depth) +0.4, −0.0
- F (width) ±0.2
- P (pitch diameter) ±0.13
- R (radius at bottom)
  R ≤ 2 +0.8, −0.0
  R > 2 ±0.8
- 23 deg (angle) ± 1/2 deg

REDUCING FLANGES

THREADED AND SLIP-ON TYPES

HUB

For hub diameter (X) and height of hub above the back of the flange (N) refer to the list of standard flange specification of the same type and pressure and use the dimensions of a flange **one nominal pipe size smaller** than the nominal pipe size from which the reduction is being made.

FLANGE O.D., DRILLING TEMPLATE AND THICKNESS

Outside diameter, drilling template and flange thickness Q(see note on FACINGS) agree with the dimensions of a standard flange of the nominal pipe size from which the reduction is being made.

FACING

Facing dimesions also agree with the dimensions of a standrd flanges of the nominal pipe size from which the reduction is being made.
150 lb. and 300 lb. forged steel Threaded, Slip-on, Welding Neck and Blind flanges are furnished with American Standard 1/16" raised face which is included in flange thickness. Q. 400 lb., 600 lb., 900 lb., 1500 lb. and 2500 lb. flanges are supplied with American Standard 1/ 4" raised face which is not included in flange thickness (Q).

BORE OR TAPPING

The bore or tapping is machined to accept a pipe of the nominal pipe size to which the reduction is being made. For reduction to sizes smaller than shown, BLIND FLANGES are tapped or bored to specified nominal pipe size.

EXAMPLE

A. The size designation is NPS 6 x 2 1/2 — Class 300 reducing threaded flange. This flange has the following dimensions:following dimensions:
NPS 2 1/2 = taper pipe thread tapping (ASME B1.20.1)
320 mm = diameter of regular NPS 6 Class 300 threaded flange
35 mm = thickness of regular NPS 6 Class 300 threaded flange
178 mm = diameter of hub for regular NPS 5 Class 300 threaded flange. Hub diameter may be one size small to reduce machining. In this example a hub diameter of NPS 2 1/2 would be the smallest acceptable.
15.5 mm = height of hub for regular NPS 5 Class 300 threaded flange.

B. The size designation is NPS 6 x 2 — Class 300 reducing threaded flange. Use regular NPS 6 Class 300 blind flange tapped with NPS 2 taper pipe thread (ASME B1.20.1).

WELDING NECK TYPES

On Reducing Welding Neck Flages, which are made only on special order, the hub dimensions agree with the hub dimensions of standard flanges of the size to which reduction is being made. Other flange dimenisons, including the drilling template, agree with the standard dimensions of the size from which the reduction is being made.

THREADED-SLIP-ON-WELDING NECK

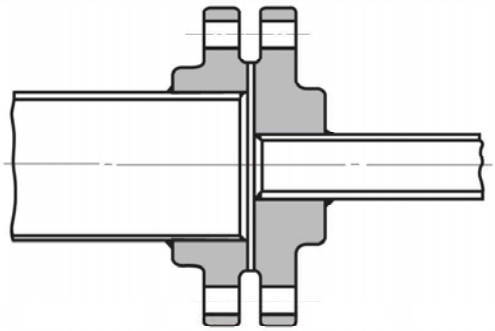

In ordering Reducing Flanges :
specify (1) nominal pipe size of the tapping or bore to which the reduction is being made, (2) the outside diameter of the flange from which the reduction is being made and (3) pressure rating.

EXAMPLE :
A 300 lb. Reducing flange for reducing from a 6″ (152. 4mm) to a 3″ (76. 2mm)nominal pipe size should be designated as a 3″ x12 1/2″ -300lb. Reducing Flange.
whether Threaded, Slip-On, or Welding Neck type is desired must also be specified.

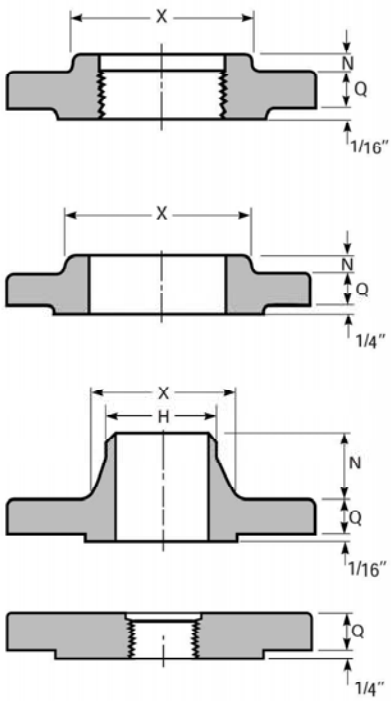

ASME B16.5 FORGED FLANGES

Dimensions in mm

	Nominal Flange	OUTSIDE DIAMETER OF FLANGE FROM WHICH REDUCTION IS BEING MADE							Smallest SizeBore or Tapping Requiring Hub Flange
		150 lb. Standard	300 lb. Standard	400 lb. Standard	600 lb. Standard	900 lb. Standard	1500 lb. Standard	2500 lb. Standard	
Nominal Pipe Size to Which Reduction made tobe is to be Specified by Purchaser	3/4	98.4	117.5	117.5	117.5	130.2	130.2	139.7	12.7
	1	108.0	123.8	123.8	123.8	149.2	149.2	158.8	12.7
	1 1/4	117.5	133.4	133.4	133.4	158.8	158.8	184.2	12.7
	1 1/2	127.5	155.6	155.6	155.6	177.8	177.8	203.2	12.7
	2	152.4	165.1	165.1	165.1	215.9	215.9	235.0	25.4
	2 1/2	177.8	190.5	190.5	190.5	244.5	244.5	266.7	31.8
	3	190.5	200.6	209.6	209.6	266.7	266.7	304.8	31.8
	3 1/2	215.9	228.6	228.6	228.6	-	-	-	38.1
	4	228.6	254.0	254.0	273.1	292.1	311.2	355.6	38.1
	5	254.0	279.4	279.4	330.2	349.3	374.7	419.1	38.1
	6	279.4	317.5	317.5	355.6	381.0	393.7	482.6	63.5
	8	342.9	381.0	381.0	419.1	469.9	482.6	552.5	76.2
	10	406.4	444.5	444.5	508.0	546.1	584.2	673.1	88.9
	12	482.6	520.7	520.7	558.8	609.6	673.1	762.0	88.9
	14	533.4	584.2	584.2	603.3	641.4	-	-	88.9
	16	596.9	647.7	647.7	685.8	704.9	-	-	101.6
	18	635.0	711.2	711.2	743.0	787.4	-	-	101.6
	20	698.5	774.7	774.7	812.8	857.3	-	-	101.6
	24	812.8	914.4	914.4	939.8	1041.1	-	-	101.6

Notes :

For reductions to sizes smaller than shown, blind flanges are tappde or bored for specified nominal pipe size

ANSI B16.5-2010

Long Welding Neck Flanges

- Class 150 Flanges
- Class 300 Flanges
- Class 400 Flanges
- Class 600 Flanges
- Class 900 Flanges
- Class 1500 Flanges
- Class 2500 Flanges

LONG WELDING NECK FLANGES

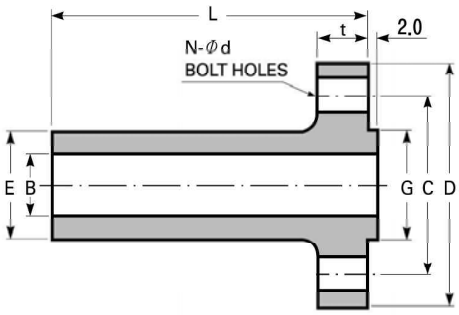

CLASS 150

Unit : mm

Nominal Pipe Size	Outside Diameter	O.D of Raised Face	Hub Diam. at Bevel	Diameter of Bore	Thickness of Flange Min	Length Through Hub	Diameter of Bolt Circle	Number of Holes	Diameter of Holes
	D	G	E	B	t	L	C	N	d
1/2	90	35.1	30.2	12.7	9.6	229	60.3	4	15.9
3/4	100	42.9	38.1	19.1	11.2	229	69.9	4	15.9
1	110	50.8	50.8	25.4	12.7	229	79.4	4	15.9
1 1/4	115	63.5	60.5	31.8	14.3	229	88.9	4	15.9
1 1/2	125	73.2	66.5	38.1	15.9	229	98.4	4	15.9
2	150	91.9	77.7	50.8	17.5	229	120.7	4	19.1
2 1/2	180	104.6	95.3	63.5	20.7	229	139.7	4	19.1
3	190	127.0	108.0	76.2	22.3	229	152.4	4	19.1
3 1/2	215	139.7	124.0	88.9	22.3	229	177.8	8	19.1
4	230	157.2	139.7	101.6	22.3	229	190.5	8	19.1
5	255	185.7	165.1	127.0	22.3	305	215.9	8	22.2
6	280	215.9	196.9	152.4	23.9	305	241.3	8	22.2
8	345	269.7	247.7	203.2	27.0	305	298.5	8	22.2
10	405	323.9	304.8	254.0	28.6	305	362.0	12	25.4
12	485	381.0	365.3	304.8	30.2	305	431.8	12	25.4
14	535	412.8	406.4	355.6	33.4	305	476.3	12	28.6
16	595	469.9	457.2	406.4	35.0	305	539.8	16	28.6
18	635	533.4	508.0	457.2	38.1	305	577.9	16	31.8
20	700	584.2	558.8	508.0	41.3	305	635.0	20	31.8
24	815	692.2	666.8	609.6	46.1	305	749.3	20	34.9

CLASS 300

Nominal Pipe Size	Outside Diameter	O.D of Raised Face	Hub Diam. at Bevel	Diameter of Bore	Thickness of Flange Min.	Length Through Hub	Diameter of Bolt Circle	Number of Holes	Diameter of Holes
	D	G	E	B	t	L	C	N	d
1/2	95	35.1	38.1	12.7	14.3	229	66.7	4	15.9
3/4	115	42.9	47.8	19.1	15.9	229	82.6	4	19.1
1	125	50.8	53.8	25.4	17.5	229	88.9	4	19.1
1 1/4	135	63.5	63.5	31.8	19.1	229	98.4	4	19.1
1 1/2	155	73.2	69.9	38.1	20.7	229	114.3	4	22.2
2	165	91.9	84.1	50.8	22.3	229	127.0	8	19.1
2 1/2	190	104.6	100.1	63.5	25.4	229	149.2	8	22.2
3	210	127.0	117.3	76.2	28.6	229	168.3	8	22.2
3 1/2	230	139.7	133.4	88.9	30.2	229	184.2	8	22.2
4	255	157.2	146.1	101.6	31.8	229	200.0	8	22.2
5	280	185.7	177.8	127.0	35.0	305	235.0	8	22.2
6	320	215.9	206.2	152.4	36.6	305	269.9	12	22.2
8	380	269.7	260.4	203.2	41.3	305	330.2	12	25.4
10	445	323.9	320.5	254.0	47.7	305	387.4	16	28.6
12	520	381.0	374.7	304.8	50.8	305	450.8	16	31.8
14	585	412.8	425.5	355.6	54.0	305	514.4	20	31.8
16	650	469.9	482.6	406.4	57.2	305	571.5	20	34.9
18	710	533.4	533.4	457.2	60.4	305	628.6	24	34.9
20	775	584.2	587.2	508.0	63.5	305	685.8	24	34.9
24	915	692.2	701.5	609.6	69.9	305	812.8	24	41.3

Notes :

(1) Bore(B) is the same as nominal pipe size.

(2) Welding neck longer than listed are available in all sizes on special order.

LONG WELDING NECK FLANGES

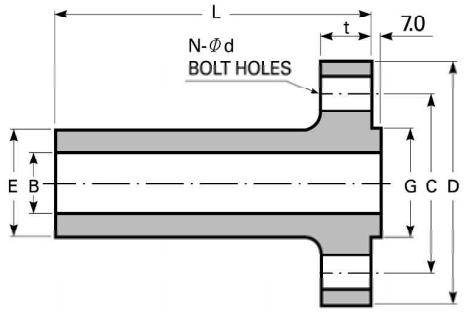

CLASS 400

Unit : mm

Nominal Pipe Size*	Outside Diameter	O.D of Raised Face	Hub Diam. at Bevel	Diameter of Bore	Thickness of Flange Min.	Length Through Hub	Diameter of Bolt Circle	Number of Holes	Diameter of Holes
	D	G	E	B	t	L	C	N	d
1	125	50.8	53.8	25.4	17.5	229	88.9	4	19.1
1 1/4	135	63.5	63.5	31.8	20.7	229	98.4	4	19.1
1 1/2	155	73.2	69.9	38.1	22.3	229	114.3	4	22.2
2	165	91.9	84.1	50.8	25.4	229	127.0	8	19.1
2 1/2	190	104.6	100.1	63.5	28.6	229	149.2	8	22.2
3	210	127.0	117.3	76.2	31.8	229	168.3	8	22.2
3 1/2	230	139.7	133.4	88.9	35.0	229	184.2	8	25.4
4	255	157.2	146.1	101.6	35.0	229	200.0	8	25.4
5	280	185.7	177.8	127.0	38.1	305	235.0	8	25.4
6	320	215.9	206.2	152.4	41.3	305	269.9	12	25.4
8	380	269.7	260.4	203.2	47.7	305	330.0	12	28.4
10	445	323.9	320.5	254.0	54.0	305	387.4	16	31.8
12	520	381.0	374.7	304.8	57.2	305	450.8	16	35.1
14	585	412.8	425.5	355.6	60.4	305	514.4	20	35.1
16	650	469.9	482.6	406.4	63.5	305	571.5	20	38.1
18	710	533.4	533.4	457.2	66.7	305	628.6	24	38.1
20	775	584.2	587.2	508.0	69.9	305	685.8	24	41.1
24	915	692.2	701.5	609.6	76.2	305	812.8	24	47.8

CLASS 600

Nominal Pipe Size	Outside Diameter	O.D of Raised Face	Hub Diam. at Bevel	Diameter of Bore	Thickness of Flange Min.	Length Through Hub	Diameter of Bolt Circle	Number of Holes	Diameter of Holes
	D	G	E	B	t	L	C	N	d
1	125	50.8	53.8	25.4	17.5	229	88.9	4	19.1
1 1/4	135	63.5	63.5	31.8	20.7	229	98.4	4	19.1
1 1/2	155	73.2	69.9	38.1	22.3	229	114.3	4	22.2
2	165	91.9	84.1	50.8	25.4	229	127.0	8	19.1
2 1/2	190	104.6	100.1	63.5	28.6	229	149.2	8	22.2
3	210	127.0	117.3	76.2	31.8	229	168.3	8	22.2
3 1/2	230	139.7	133.4	88.9	35.0	229	184.2	8	25.4
4	275	157.2	152.4	101.6	38.1	229	215.9	8	25.4
5	330	185.7	190.5	127.0	44.5	305	266.7	8	28.6
6	355	215.9	222.3	152.4	47.7	305	292.1	12	28.6
8	420	269.7	273.1	203.2	55.6	305	349.2	12	31.8
10	510	323.9	342.9	254.0	63.5	305	431.8	16	34.9
12	560	381.0	400.1	304.8	66.7	305	489.0	20	34.9
14	605	412.8	431.8	355.6	69.9	305	527.0	20	38.1
16	685	469.9	495.3	406.4	76.2	305	603.2	20	41.3
18	745	533.4	546.1	457.2	82.6	305	654.0	20	44.5
20	815	584.2	609.1	508.0	88.9	305	723.9	24	44.5
24	940	692.2	717.6	609.6	101.6	305	838.2	24	50.8

Notes :

(1) Bore(B) is the same as nominal pipe size.

(2) Welding neck longer than listed are available in all sizes on special order.

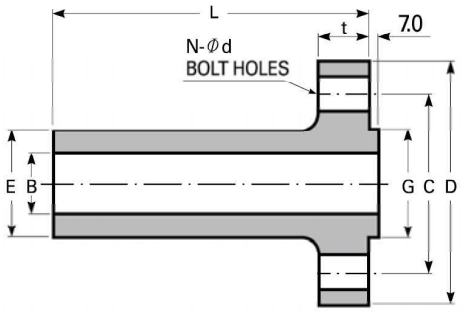

CLASS 900

Unit : mm

Nominal Pipe Size	Outside Diameter	O.D of Raised Face	Hub Diam. at Bevel	Diameter of Bore	Thickness of Flange Min	Length Through Hub	Diameter of Bolt Circle	Number of Holes	Diameter of Holes
	D	G	E	B	t	L	C	N	d
1	150	50.8	52.3	25.4	28.6	229	101.6	4	25.4
1 1/4	160	63.5	63.5	31.8	28.6	229	111.1	4	25.4
1 1/2	180	73.2	69.9	38.1	31.8	229	123.8	4	28.6
2	215	91.9	104.6	50.8	38.1	229	165.1	8	25.4
2 1/2	245	104.6	124.0	63.5	41.3	229	190.5	8	28.6
3	240	127.0	127.0	76.2	38.1	229	190.5	8	25.4
4	290	157.2	158.8	101.6	44.5	229	235.0	8	31.8
5	350	185.7	190.5	127.0	50.8	229	279.4	8	34.9
6	380	215.9	235.0	152.4	55.6	305	317.5	12	31.8
8	470	269.7	298.5	203.2	63.5	305	393.7	12	38.1
10	545	323.9	368.3	254.0	69.9	305	469.9	16	38.1
12	610	381.0	419.1	304.8	79.4	305	533.4	20	38.1
14	640	412.8	450.9	355.6	85.8	-	558.8	20	41.3
16	705	469.9	508.0	406.4	88.9	-	616.0	20	44.5
18	785	533.4	565.2	457.2	101.6	-	685.8	20	50.8
20	855	584.2	622.3	508.0	108.0	-	749.3	20	54.0
24	1040	692.2	749.3	609.6	139.7	-	901.7	20	66.7

CLASS 1500

Nominal Pipe Size	Outside Diameter	O.D of Raised Face	Hub Diam. at Bevel	Diameter of Bore	Thickness of Flange Min.	Length Through Hub	Diameter of Bolt Circle	Number of Holes	Diameter of Holes
	D	G	E	B	t	L	C	N	d
1	150	50.8	52.3	25.4	28.6	229	101.6	4	25.4
1 1/4	160	63.5	63.5	31.8	28.6	229	111.1	4	25.4
1 1/2	180	73.2	69.9	38.1	31.8	229	123.8	4	28.6
2	215	91.9	104.6	50.8	38.1	229	165.1	8	25.4
2 1/2	245	104.6	124.0	63.5	41.3	229	190.5	8	28.6
3	265	127.0	133.4	76.2	47.7	229	203.2	8	31.8
4	310	157.2	162.1	101.6	54.0	229	241.3	8	34.9
5	375	185.7	196.9	127.0	73.1	229	292.1	8	41.3
6	395	215.9	228.6	152.4	82.6	305	317.5	12	38.1
8	485	269.7	292.1	203.2	92.1	305	393.7	12	44.5
10	585	323.9	368.3	254.0	108.0	305	482.6	12	50.8
12	675	381.0	450.9	304.8	123.9	305	571.5	16	54.0
14	750	412.8	495.3	355.6	133.4	-	635.0	16	60.3
16	825	469.9	552.5	406.4	146.1	-	704.8	16	66.7
18	915	533.4	596.9	457.2	162.0	-	774.7	16	73.0
20	985	584.2	641.4	508.0	177.8	-	831.8	16	79.4
24	1170	692.2	762.0	609.6	203.2	-	990.6	16	92.1

Notes :

(1) Bore(B) is the same as nominal pipe size.

(2) Welding neck longer than listed are available in all sizes on special order.

CLASS 2500 FLANGES

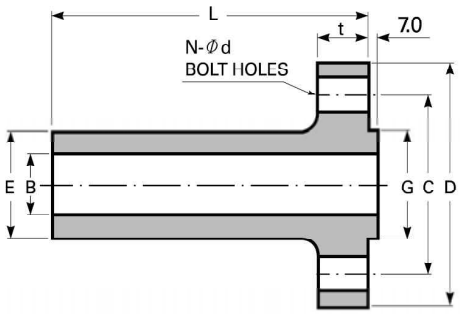

LONG WELDING NECK

Unit : mm

Nominal Pipe Size	Outside Diameter	O.D of Raised Face	Hub Diam. at Bevel	Diameter of Bore	Thickness of Flange Min.	Length Through Hub	Diameter of Bolt Circle	Number of Holes	Diameter of Holes
	D	G	E	B	t	L	C	N	d
1	160	50.8	57.2	25.4	35.0	229	108.0	4	25.4
1 1/4	185	63.5	73.2	31.8	38.1	229	130.2	4	28.6
1 1/2	205	73.2	79.2	38.1	44.5	229	146.0	4	31.8
2	235	91.9	95.3	50.8	50.9	229	171.4	8	28.6
2 1/2	265	104.6	114.3	63.5	57.2	229	196.8	8	31.8
3	305	127.0	133.4	76.2	66.7	229	228.6	8	34.9
4	355	157.2	165.1	101.6	76.2	229	273.0	8	41.3
5	420	185.7	203.2	127.0	92.1	229	323.8	8	47.6
6	485	215.9	235.0	152.4	108.0	305	368.3	8	54.0
8	550	269.7	304.8	203.2	127.0	305	438.2	12	54.0
10	675	323.9	374.7	254.0	165.1	305	539.8	12	66.7
12	760	381.0	441.5	304.8	184.2	305	619.1	12	73.0

Notes :

(1) Bore(B) is the same as nominal pipe size.

(2) Welding neck longer than listed are available in all sizes on special order.

▶ Straight Hub Welding Flanges

- Straight Hub Welding Flanges are an extension of Welding Neck flanges and have straight hubs of uniform thickness. With the exception of the following, the straight hub welding flanges shall have dimensions of the welding neck flanges of the size.

ANSI B16.48-2005

Line Blanks (API 590 FIG.8)

- CLASS 150 / 300 Flanges
- CLASS 600 / 900 Flanges
- CLASS 1500 / 2500 Flanges

STEEL LINE BLANKS

ASME B16.48-1997

1. General

a. Figure 8 Blank
A figure 8 blank(also called a spectacle blank) is a pressure retaining plate with one solid end and one open end connected with a web or tie bar

b. Paddle Blank
A paddle blank is similar to the solid end of a figure 8 blank(with handle) and is generally used in conjunction with a paddle spacer in large sizes.

c. Paddle Spacer
A paddle spacer is similar to the open end of a figure 8 blank(with handle) and is generally used in conjunction with a paddle blank.

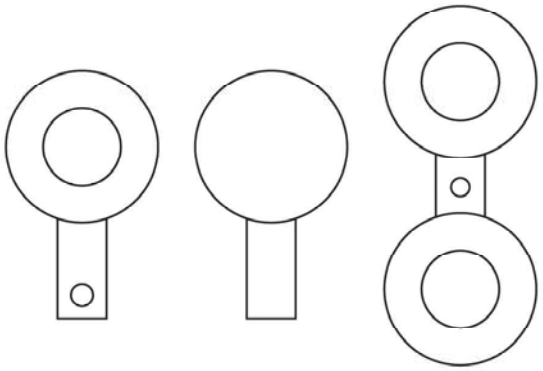

Paddle Spacer Paddle Blank Figure 8 Blank

2. MATERIAL

Material Group	Forgings	Plate	Castings
1.1	A105[1]	A515 Gr.70[1]	A216 Gr. WCB[1]
		A516 Gr.70[1][2]	
		A537 Cl.1[3]	
1.7	A182 Gr.F2[4]	A204 Gr.C[5]	-
1.9	A182 Gr.F11 Cl.2[6]	A387 Gr.11 Cl.2[7]	A217 Gr. WC6[8]
1.10	A182 Gr.F22 Cl.3[7]	A387 Gr.22 Cl.2[7]	A217 Gr. WC9[8]
1.13	A182 Gr.F5	-	-
2.1	A182 Gr.F304[9]	A240 Gr. 304[9]	A351 Gr. CF8[9]
2.2	A182 Gr.F316[9]	A240 Gr. 316[9]	A351 Gr. CF8M[9]
2.4	A182 Gr.F321[4]	A240 Gr. 321[4]	-
2.5	A182 Gr.F347[4]	A240 Gr. 347[4]	A351 Gr. CF8C[9]

NOTE:

(1) Upon prolonged exposure to temperatures above 427℃, the carbide phase of carbon steel may be converted to graphite. Permissible but not recommended for prolonged service above 427℃

(2) Not to be used over 454℃

(3) Not to be used over 371℃

(4) Not to be used above 538℃

(5) Upon prolonged exposure to temperatures above 468℃, the carbide phase of carbon-molyb-denum steel may be converted to graphite. Permissible but not recommended for prolonged service above 468℃

(6) Permissible but not recommended for prolonged use above 593℃. Use normalized and tempered material only.

(7) Permissible but not recommended for prolonged use above 593℃

(8) Not to be used over 593℃. Use normalized and tempered material only.

(9) At temperatures over 538℃, use the material only when the carbon content is 0.04% or higher.

3. TOLERANCE

Tolerance for facings shall be in accordance with ASME B16.5. Thickness tolerances are:
NPS 18 and smaller +3 / -0
NPS 20 and lorger +4.8 / -0

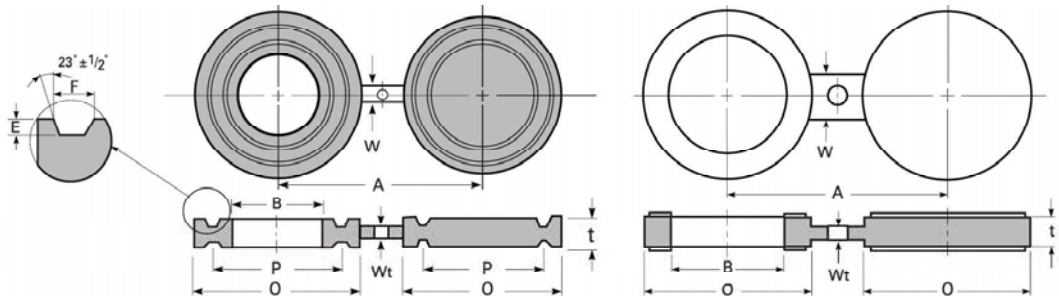

Class 150 FIGURE 8 BLANK RAISED FACE & FEMALE RING-JOINT FACING

Unit : mm

Nominal Pipe Size	SPECTACLE RAISED FACE						SPECTACLE RING JOINT FACING								
	Inside Diam.	Outside Diam.	Center -line Diam.	Thick -ness	Web Width	Hole Diam.	Inside Diam.	Outside Diam.	Center -line Diam.	Thick -ness	Web Width	Pitch Diam.	Width of Groove	Depth of Groove	Hole Diam.
	B	O	A	t	W		B	O	A	t	W	P	F	E	
1/2	15.7	44.5	60.5	3.0	38.1	15.7	-	-	-	-	-	-	-	-	-
3/4	20.8	53.8	69.9	3.0	38.1	15.7	-	-	-	-	-	-	-	-	-
1	26.7	63.5	79.2	3.0	38.1	15.7	33.5	63.5	79.2	19.1	50.8	47.6	8.7	6.4	15.7
1 1/4	42.2	73.2	88.9	6.4	38.1	15.7	42.2	73.2	88.9	19.1	50.8	57.2	8.7	6.4	15.7
1 1/2	48.3	82.6	98.6	6.4	38.1	15.7	48.3	82.6	98.6	19.1	57.2	65.1	8.7	6.4	15.7
2	60.5	101.6	120.7	6.4	50.8	19.1	60.5	101.6	120.7	19.1	57.2	82.6	8.7	6.4	19.1
2 1/2	73.2	120.7	139.7	6.4	50.8	19.1	73.2	120.7	139.7	22.4	57.2	101.6	8.7	6.4	19.1
3	88.9	133.4	152.4	6.4	63.5	19.1	88.9	133.4	152.4	22.4	57.2	114.3	8.7	6.4	19.1
3 1/2	101.6	158.8	177.8	9.7	63.5	19.1	101.6	153.9	177.8	22.4	63.5	131.8	8.7	6.4	19.1
4	114.3	171.5	190.5	9.7	63.5	19.1	114.3	171.5	190.5	22.4	63.5	149.2	8.7	6.4	19.1
5	141.2	193.5	215.9	9.7	76.2	22.4	141.2	193.5	215.9	25.4	69.9	171.5	8.7	6.4	22.4
6	168.1	218.9	241.3	12.7	76.2	22.4	168.1	218.9	241.3	25.4	82.6	193.7	8.7	6.4	22.4
8	218.9	276.4	298.5	12.7	76.2	22.4	218.9	273.1	298.5	28.4	95.3	247.7	8.7	6.4	22.4
10	273.1	336.6	362.0	15.7	101.6	25.4	273.1	330.2	362.0	31.8	101.6	304.8	8.7	6.4	25.4
12	323.9	406.4	431.8	19.1	101.6	25.4	323.9	406.4	431.8	35.1	120.7	381.0	8.7	6.4	25.4
14	355.6	447.5	476.3	19.1	108.0	28.4	355.6	425.5	476.3	35.1	127.0	396.9	8.7	6.4	28.4
16	406.4	511.0	539.8	22.4	108.0	28.4	406.4	482.6	539.8	38.1	127.0	454.0	8.7	6.4	28.4
18	457.2	546.1	577.9	25.4	114.3	31.8	457.2	546.1	577.9	41.1	127.0	517.5	8.7	6.4	31.8
20	508.0	603.3	635.0	28.4	120.7	31.8	508.0	596.9	635.0	41.1	127.0	558.8	8.7	6.4	31.8
24	609.6	714.2	749.3	31.8	139.7	35.1	609.6	711.2	749.3	47.8	152.4	673.1	8.7	6.4	35.1

Class 300 FIGURE 8 BLANK RAISED FACE & FEMALE RING-JOINT FACING

Unit : mm

Nominal Pipe Size	SPECTACLE RAISED FACE						SPECTACLE RING JOINT FACING								
	Inside Diam.	Outside Diam.	Center -line Diam.	Thick -ness	Web Width	Hole Diam.	Inside Diam.	Outside Diam.	Center -line Diam.	Thick -ness	Web Width	Pitch Diam.	Width of Groove	Depth of Groove	Hole Diam.
	B	O	A	t	W		B	O	A	t	W	P	F	E	
1/2	15.7	50.8	66.5	6.4	38.1	15.7	21.3	50.8	57.4	15.7	38.1	34.1	7.1	5.6	15.7
3/4	20.8	63.5	82.6	6.4	38.1	19.1	26.7	63.5	82.6	19.1	44.5	42.9	8.7	6.4	19.1
1	26.7	69.9	88.9	6.4	38.1	19.1	33.5	69.9	88.9	19.1	50.8	50.8	8.7	6.4	19.1
1 1/4	42.2	79.2	98.6	6.4	38.1	19.1	42.2	79.2	98.6	22.4	50.8	60.3	8.7	6.4	19.1
1 1/2	48.3	91.9	114.3	6.4	50.8	22.4	48.3	90.4	114.3	22.4	57.2	68.3	8.7	6.4	22.4
2	60.5	108.0	127.0	9.7	50.8	19.1	60.5	108.0	127.0	25.4	57.2	82.6	11.9	7.9	19.1
2 1/2	73.2	127.0	149.4	9.7	63.5	22.4	73.2	127.0	149.4	28.4	57.2	101.6	11.9	7.9	22.4
3	88.9	146.1	168.1	9.7	63.5	22.4	88.9	146.1	168.1	28.4	57.2	123.8	11.9	7.9	22.4
3 1/2	101.6	162.1	184.2	12.7	63.5	22.4	101.6	158.8	184.2	28.4	63.5	131.8	11.9	7.9	22.4
4	114.3	177.8	200.2	12.7	63.5	22.4	114.3	174.8	200.2	31.8	63.5	149.2	11.9	7.9	22.4
5	141.2	212.9	235.0	15.7	76.2	22.4	141.2	209.6	235.0	35.1	69.9	181.0	11.9	7.9	22.4
6	168.1	247.7	269.7	15.7	76.2	22.4	168.1	241.3	269.7	35.1	82.6	211.2	11.9	7.9	22.4
8	218.9	304.8	330.2	22.4	88.9	25.4	218.9	301.8	330.2	41.1	95.3	269.9	11.9	7.9	25.4
10	273.1	358.6	387.4	25.4	101.6	28.4	273.1	355.6	387.4	44.5	101.6	323.9	11.9	7.9	28.4
12	323.9	419.1	450.9	28.4	101.6	31.8	323.9	412.8	450.9	50.8	120.7	381.0	11.9	7.9	31.8
14	355.6	482.6	514.4	31.8	120.7	31.8	355.6	457.2	514.4	53.8	127.0	419.1	11.9	7.9	31.8
16	406.4	536.4	571.5	38.1	124.0	35.1	406.4	508.0	571.5	57.2	127.0	469.9	11.9	7.9	35.1
18	457.2	593.9	628.7	41.1	114.3	35.1	457.2	574.5	628.7	60.5	127.0	533.4	11.9	7.9	35.1
20	508.0	650.7	685.8	44.5	120.7	35.1	508.0	635.0	685.8	69.9	127.0	584.2	13.5	9.5	35.1
24	609.6	771.7	812.8	50.8	139.7	41.1	609.6	749.3	812.8	79.2	152.4	692.2	16.7	11.1	41.1

Notes :

(1) Holes size(where required due to bolt spacing) shall be the same as the flange bolt hole, and located such that it will not interfere with bolting between two flanges.

(2) The thickness of the web(or tie bar) dimension Wt shall be 0.25 in. minimum, except when t is less than 0.25 in., Wt shall equal t

CLASS 600 / 900 FLANGES

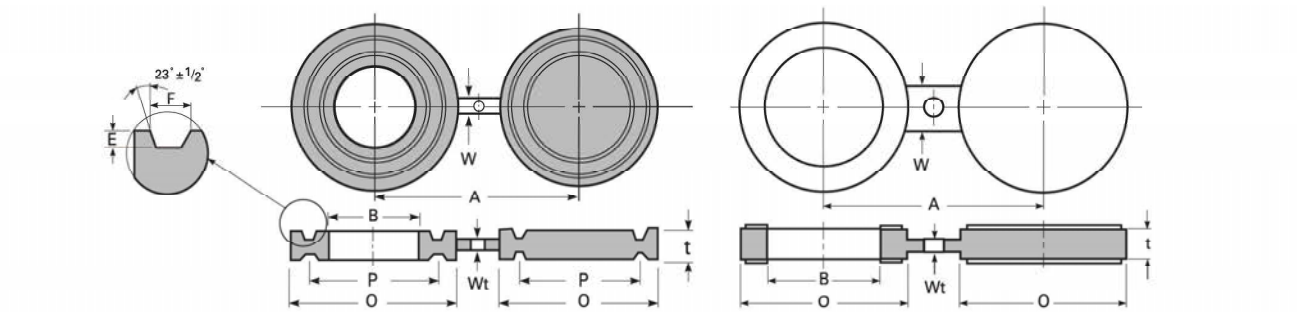

Class 600 FIGURE 8 BLANK RAISED FACE & FEMALE RING-JOINT FACING

Unit : mm

Nominal Pipe Size	SPECTACLE RAISED FACE						SPECTACLE RING JOINT FACING								
	Inside Diam.	Outside Diam.	Center -line Diam.	Thick -ness	Web Width	Hole Diam.	Inside Diam.	Outside Diam.	Center -line Diam.	Thick -ness	Web Width	Pitch Diam.	Width of Groove	Depth of Groove	Hole Diam.
	B	O	A	t	W		B	O	A	t	W	P	F	E	
1/2	15.7	50.8	66.5	6.4	38.1	15.7	21.3	50.8	57.4	19.1	38.1	34.1	7.1	5.6	15.7
3/4	20.8	63.5	82.6	6.4	38.1	19.1	26.7	63.5	0.0	22.4	44.5	42.9	8.7	6.4	19.1
1	26.7	69.9	88.9	6.4	57.2	19.1	33.5	69.9	88.9	22.4	50.8	50.8	8.7	6.4	19.1
1 1/4	36.6	79.2	98.6	9.7	57.2	19.1	42.2	79.2	98.6	22.4	50.8	60.3	8.7	6.4	19.1
1 1/2	42.7	91.9	114.3	9.7	66.5	22.4	48.3	90.4	114.3	22.4	57.2	68.3	8.7	6.4	22.4
2	54.9	108.0	127.0	9.7	57.2	19.1	60.5	108.0	127.0	28.4	57.2	82.6	11.9	7.9	19.1
2 1/2	67.1	127.0	149.4	12.7	66.5	22.4	73.2	127.0	149.4	31.8	57.2	101.6	11.9	7.9	22.4
3	82.8	146.1	168.1	12.7	66.5	22.4	88.9	146.1	168.1	31.8	57.2	123.8	11.9	7.9	22.4
3 1/2	95.5	158.8	184.2	15.7	76.2	25.4	101.6	158.8	184.2	35.1	63.5	131.8	11.9	7.9	25.4
4	108.2	190.5	215.9	15.7	76.2	25.4	114.3	174.8	215.9	35.1	63.5	149.2	11.9	7.9	25.4
5	134.6	238.3	266.7	19.1	85.9	28.4	141.2	209.6	266.7	38.1	69.9	181.0	11.9	7.9	28.4
6	161.5	263.7	292.1	22.4	85.9	28.4	168.1	241.3	292.1	44.5	82.6	211.2	11.9	7.9	28.4
8	211.6	317.5	349.3	28.4	95.3	31.8	218.9	301.8	349.3	50.8	95.3	269.9	11.9	7.9	31.8
10	264.7	396.7	431.8	35.1	104.6	35.1	273.1	355.6	431.8	57.2	101.6	323.9	11.9	7.9	35.1
12	314.7	454.2	489.0	41.1	104.6	35.1	323.9	412.8	489.0	63.5	120.7	381.0	11.9	7.9	35.1
14	345.9	489.0	527.1	44.5	114.3	38.1	355.6	457.2	527.1	66.5	127.0	419.1	11.9	7.9	38.1
16	396.7	561.8	603.3	50.8	124.0	41.1	406.4	508.0	603.3	73.2	127.0	469.9	11.9	7.9	41.1
18	447.5	609.6	654.1	53.8	133.4	44.5	457.2	574.5	654.1	79.2	127.0	533.4	11.9	7.9	44.5
20	496.8	679.5	723.9	63.5	133.4	44.5	508.0	635.0	723.9	88.9	127.0	584.2	13.5	9.5	44.5
24	596.9	787.4	838.2	73.2	152.4	50.8	609.6	749.3	838.2	104.6	152.4	692.2	16.7	11.1	50.8

Class 900 FIGURE 8 BLANK RAISED FACE & FEMALE RING-JOINT FACING

Unit : mm

Nominal Pipe Size	SPECTACLE RAISED FACE						SPECTACLE RING JOINT FACING								
	Inside Diam.	Outside Diam.	Center -line Diam.	Thick -ness	Web Width	Hole Diam.	Inside Diam.	Outside Diam.	Center -line Diam.	Thick -ness	Web Width	Pitch Diam.	Width of Groove	Depth of Groove	Hole Diam.
	B	O	A	t	W		B	O	A	t	W	P	F	E	
1/2	15.7	60.5	82.6	6.4	38.1	22.4	21.3	60.5	82.6	22.4	38.1	39.4	8.7	6.4	22.4
3/4	20.8	66.5	88.9	6.4	41.1	22.4	26.7	66.5	88.9	22.4	44.5	44.5	8.7	6.4	22.4
1	26.7	76.2	101.6	6.4	57.2	25.4	33.5	71.4	101.6	22.4	50.8	50.8	8.7	6.4	25.4
1 1/4	36.6	85.9	111.3	9.7	57.2	25.4	42.2	81.0	111.3	25.4	50.8	60.3	8.7	6.4	25.4
1 1/2	42.7	95.3	124.0	9.7	66.5	28.4	48.3	91.9	124.0	25.4	63.5	68.3	8.7	6.4	28.4
2	54.9	139.7	165.1	12.7	57.2	25.4	60.5	124.0	165.1	31.8	50.8	95.3	11.9	7.9	25.4
2 1/2	67.1	162.1	190.5	12.7	66.5	28.4	73.2	136.7	190.5	35.1	66.5	108.0	11.9	7.9	28.4
3	82.8	165.1	190.5	15.7	66.5	25.4	88.9	155.4	190.5	35.1	66.5	123.8	11.9	7.9	25.4
4	108.2	203.2	235.0	19.1	76.2	31.8	114.3	180.8	235.0	41.1	73.2	149.2	11.9	7.9	31.8
5	134.6	244.3	279.4	22.4	85.9	35.1	141.2	215.9	279.4	44.5	73.2	181.0	11.9	7.9	35.1
6	161.5	285.8	317.5	25.4	85.9	31.8	168.1	241.3	317.5	47.8	73.2	211.2	11.9	7.9	31.8
8	211.6	355.6	393.7	35.1	95.3	38.1	218.9	307.8	393.7	57.2	79.2	269.9	11.9	7.9	38.1
10	264.7	431.8	469.9	41.1	104.6	38.1	273.1	362.0	469.9	63.5	120.7	323.9	11.9	7.9	38.1
12	314.7	495.3	533.4	47.8	104.6	38.1	323.9	419.1	533.4	73.2	120.7	381.0	11.9	7.9	38.1
14	345.9	517.7	558.8	53.8	114.3	41.1	355.6	466.9	558.8	82.6	120.7	419.1	16.7	11.1	41.1
16	396.7	571.5	616.0	60.5	124.0	44.5	406.4	523.7	616.0	91.9	127.0	469.9	16.7	11.1	44.5
18	447.5	635.0	685.8	66.5	133.4	50.8	457.2	593.9	685.8	101.6	133.4	533.4	19.8	12.7	50.8
20	496.8	695.5	749.3	73.2	133.4	53.8	508.0	647.7	749.3	111.3	127.0	584.2	19.8	12.7	53.8
24	596.9	835.2	901.7	88.9	152.4	66.5	609.6	771.7	901.7	133.4	139.7	692.2	27.0	15.9	66.5

Notes :

(1) Holes size(where required due to bolt spacing) shall be the same as the flange bolt hole, and located such that it will not interfere with bolting between two flanges.

(2) The thickness of the web(or tie bar) dimension Wt shall be 0.25 in. minimum, except when t is less than 0.25 in., Wt shall equal t

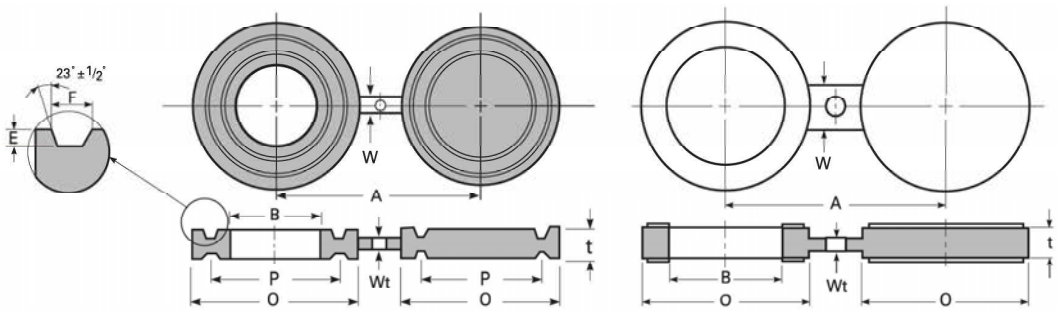

Class 1500 FIGURE 8 BLANK RAISED FACE & FEMALE RING-JOINT FACING

Unit : mm

No-minal Pipe Size	SPECTACLE RAISED FACE						SPECTACLE RING JOINT FACING								
	Inside Diam.	Outside Diam.	Center -line Diam.	Thick -ness	Web Width	Hole Diam.	Inside Diam.	Outside Diam.	Center -line Diam.	Thick -ness	Web Width	Pitch Diam.	Width of Groove	Depth of Groove	Hole Diam.
	B	O	A	t	W		B	O	A	t	W	P	F	E	
1/2	15.7	60.5	82.6	6.4	38.1	22.4	21.3	60.5	82.6	22.4	38.1	39.4	8.7	6.4	22.4
3/4	20.8	66.5	88.9	9.7	41.1	22.4	26.7	66.5	88.9	25.4	44.5	44.5	8.7	6.4	22.4
1	26.7	76.2	101.6	9.7	63.5	25.4	33.5	71.4	101.6	25.4	53.8	50.8	8.7	6.4	25.4
1 1/4	35.1	85.9	111.3	9.7	63.5	25.4	42.2	81.0	111.3	25.4	53.8	60.3	8.7	6.4	25.4
1 1/2	40.9	95.3	124.0	12.7	69.9	28.4	48.3	91.9	124.0	28.4	57.2	68.3	8.7	6.4	28.4
2	52.6	139.7	165.1	12.7	69.9	25.4	60.5	124.0	165.1	35.1	53.8	95.3	11.9	7.9	25.4
2 1/2	62.7	162.1	190.5	15.7	76.2	28.4	73.2	136.7	190.5	38.1	57.2	108.0	11.9	7.9	28.4
3	78.0	171.5	203.2	19.1	76.2	31.8	88.9	168.1	203.2	44.5	73.2	136.5	11.9	7.9	31.8
4	102.4	206.2	241.3	22.4	88.9	35.1	114.3	193.5	241.3	47.8	76.2	161.9	11.9	7.9	35.1
5	128.3	251.0	292.1	28.4	88.9	41.1	141.2	228.6	292.1	53.8	76.2	193.7	11.9	7.9	41.1
6	153.9	279.4	317.5	35.1	88.9	38.1	168.1	247.7	393.7	60.5	79.2	211.2	13.5	9.5	38.1
8	202.7	349.3	393.7	41.1	101.6	44.5	218.9	317.5	482.6	73.2	85.9	269.9	16.7	11.1	44.5
10	254.5	431.8	482.6	50.8	114.3	50.8	273.1	371.3	571.5	82.6	133.4	323.9	16.7	11.1	50.8
12	303.3	517.7	571.5	60.5	114.3	53.8	323.9	438.2	635.0	101.6	133.4	381.0	23.0	14.3	53.8
14	333.2	574.5	635.0	66.5	127.0	60.5	355.6	489.0	704.9	111.3	139.7	419.1	27.0	15.9	60.5
16	381.0	638.0	704.9	76.2	133.4	66.5	406.4	546.1	774.7	124.0	146.1	469.9	30.2	17.5	66.5
18	428.8	701.5	774.7	85.9	146.1	73.2	457.2	612.6	831.9	133.4	152.4	533.4	30.2	17.5	73.2
20	477.8	752.3	831.9	95.3	152.4	79.2	508.0	673.1	749.3	142.7	165.1	584.2	33.4	17.5	79.2
24	574.5	898.7	990.6	111.3	177.8	91.9	609.6	793.8	990.6	168.1	177.8	692.2	36.5	20.6	91.9

Class 2500 FIGURE 8 BLANK RAISED FACE & FEMALE RING-JOINT FACING

Unit : mm

No-minal Pipe Size	SPECTACLE RAISED FACE						SPECTACLE RING JOINT FACING								
	Inside Diam.	Outside Diam.	Center -line Diam.	Thick -ness	Web Width	Hole Diam.	Inside Diam.	Outside Diam.	Center -line Diam.	Thick -ness	Web Width	Pitch Diam.	Width of Groove	Depth of Groove	Hole Diam.
	B	O	A	t	W		B	O	A	t	W	P	F	E	
1/2	15.7	66.5	88.9	9.7	38.1	22.4	21.3	65.0	88.9	25.4	38.1	42.9	8.7	6.4	22.4
3/4	20.8	73.2	95.3	9.7	41.1	22.4	26.7	73.2	95.3	28.4	44.5	50.8	8.7	6.4	22.4
1	26.7	82.6	108.0	9.7	63.5	25.4	33.5	82.6	108.0	28.4	53.8	60.3	8.7	6.4	25.4
1 1/4	35.1	101.6	130.0	12.7	63.5	28.4	42.2	101.6	130.0	35.1	53.8	72.2	11.9	7.9	28.4
1 1/2	40.9	114.3	146.1	15.7	69.9	31.8	48.3	114.3	146.1	38.1	60.5	82.6	11.9	7.9	31.8
2	52.6	142.7	171.5	15.7	69.9	28.4	60.5	133.4	171.5	41.1	57.2	101.6	11.9	7.9	28.4
2 1/2	62.7	165.1	196.9	19.1	76.2	31.8	73.2	149.4	196.9	47.8	60.5	111.1	13.5	9.5	31.8
3	78.0	193.5	228.6	22.4	76.2	35.1	88.9	168.1	228.6	50.8	76.2	127.0	13.5	9.5	35.1
4	102.4	231.6	273.1	28.4	88.9	41.1	114.3	203.2	273.1	63.5	82.6	157.2	16.7	11.1	41.1
5	128.3	276.4	323.9	35.1	88.9	47.8	141.2	241.3	323.9	73.2	88.9	190.5	19.8	12.7	47.8
6	153.9	314.5	368.3	41.1	88.9	53.8	168.1	279.4	368.3	82.6	95.3	228.6	19.8	12.7	53.8
8	198.4	384.0	438.2	53.8	101.6	53.8	218.9	339.9	438.2	98.6	95.3	279.4	23.0	14.3	53.8
10	247.7	472.9	539.8	66.5	114.3	66.5	273.1	425.5	539.8	117.3	90.9	342.9	30.2	17.5	66.5
12	288.8	546.1	619.3	79.2	114.3	73.2	323.9	495.3	619.3	133.4	152.4	406.4	33.4	17.5	73.2

Notes :

(1) Holes size(where required due to bolt spacing) shall be the same as the flange bolt hole, and located such that it will not interfere with bolting between two flanges.

(2) The thickness of the web(or tie bar) dimension Wt shall be 0.25 in. minimum, except when t is less than 0.25 in., Wt shall equal t.

FLANGES FACINGS

2mm raised face regularly furnished on Classes 150 and 300 unless otherwise ordered

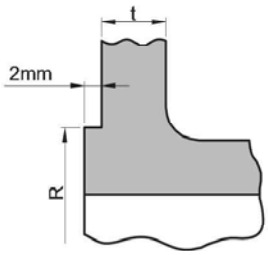

Small female face (on end of pipe)

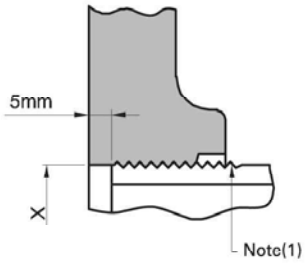

7mm raised face regularly furnished on Classes 400 and higher unless otherwise ordered

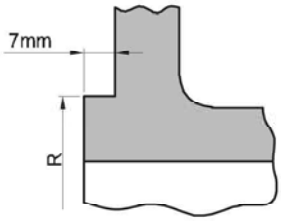

Large or small tongue face [Note (2)]

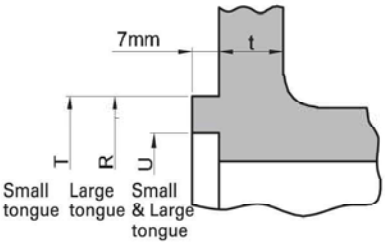

Large or small male face [Note (2)]

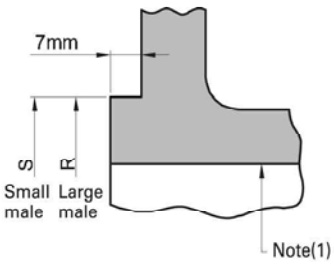

Large or small groove face [Note (2)]

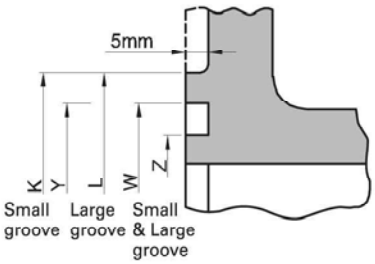

Large or small female face [Note (2)]

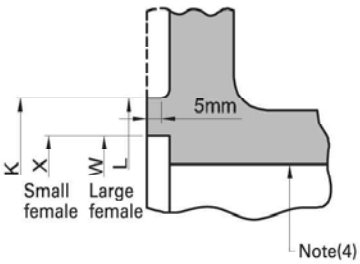

Ring joint face

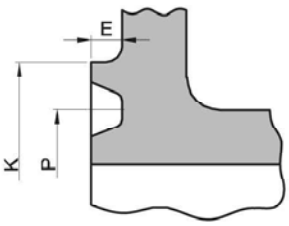

Small male face (on end of pipe)

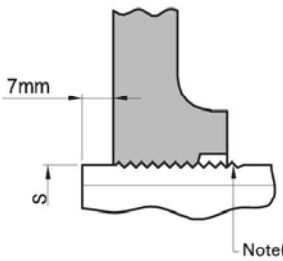

Lapped Joint Raised face

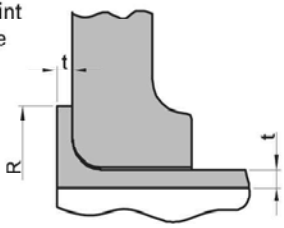

Lapped Joint Ring joint

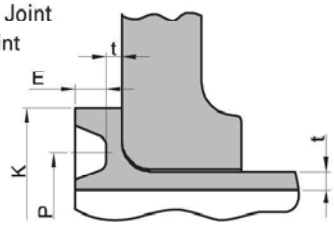

ASME B16.5 FORGED FLANGES

Unit : mm

No-minal Pip Size	OUTSIDE DIAMETER			Inside Diameter of Large and Small Tongue	OUTSIDE DIAMETER			Inside Diameter of Large and Small Groove	HEIGHT		Depth of Groove or Female	MIN. OUTSIDE DIAMETER OF RAISED PORTION		Norminal Pipe Size
	Raised Face, Lapped, Large Male &Lagre Tongue	Small Male	Small Tongue		Large Female & Large Groove	Small Female	Small Groove		Raised Face and 300 ST'DS	Large& Small Male and Tongue Class 400 ~2500		Small Female& Groove	Large Female& Groove	
	R	S	T	U	W	X	Y	Z				K	L	
1/2	34.9	18.3	35.1	25.4	36.5	19.9	36.5	23.8	2.0	7.0	5.0	44	46	1/2
3/4	42.9	23.8	42.9	33.3	44.4	25.4	44.4	31.8	2.0	7.0	5.0	52	54	3/4
1	50.8	30.2	47.8	38.1	52.4	31.8	49.2	36.5	2.0	7.0	5.0	57	62	1
1 1/4	63.5	38.1	57.2	47.6	65.1	39.7	58.7	46.0	2.0	7.0	5.0	67	75	1 1/4
1 1/2	73.0	44.4	63.5	54.0	74.6	46.0	65.1	52.4	2.0	7.0	5.0	73	84	1 1/2
2	92.1	57.2	82.6	73.0	93.7	58.8	84.1	71.4	2.0	7.0	5.0	92	103	2
2 1/2	104.8	68.3	95.2	85.7	106.4	69.8	96.8	84.1	2.0	7.0	5.0	105	116	2 1/2
3	127.0	84.1	117.5	108.0	128.6	85.7	119.1	106.4	2.0	7.0	5.0	127	138	3
3 1/2	139.7	96.8	130.2	120.6	141.3	98.4	131.8	119.1	2.0	7.0	5.0	140	151	3 1/2
4	157.2	109.5	144.5	131.8	158.8	111.1	146.0	130.2	2.0	7.0	5.0	157	168	4
5	185.7	136.5	173.0	160.3	187.3	138.1	174.6	158.8	2.0	7.0	5.0	186	197	5
6	215.9	161.9	203.2	190.5	217.5	163.5	204.8	188.9	2.0	7.0	5.0	216	227	6
8	269.9	212.7	254.0	238.1	271.5	214.3	255.6	236.5	2.0	7.0	5.0	270	281	8
10	323.8	266.7	304.8	285.8	325.4	268.3	306.4	284.2	2.0	7.0	5.0	324	335	10
12	381.0	317.5	362.0	342.9	382.6	319.1	363.5	341.3	2.0	7.0	5.0	381	392	12
14	412.8	349.2	393.7	374.6	414.3	350.8	395.3	373.1	2.0	7.0	5.0	413	424	14
16	469.9	400.0	447.5	425.4	471.5	401.6	449.3	423.9	2.0	7.0	5.0	470	481	16
18	533.4	450.8	511.2	489.0	535.0	452.4	512.8	487.4	2.0	7.0	5.0	533	544	18
20	584.2	501.6	558.8	533.4	585.8	503.2	560.4	531.8	2.0	7.0	5.0	584	595	20
24	692.2	603.2	666.8	641.4	693.7	604.8	668.3	639.8	2.0	7.0	5.0	692	703	24

Notes :

(1) For small male and female joints, care should be taken in the use of these dimensions to insure that the inside diameter of fitting or pipe is small enough to permit sufficient bearing surface to prevent the crushing of the gasket. This applies particularly on lines where the joint is made on the end of the pipe. Inside diameter of fitting should match inside diameter of pipe as specified by purchaser. Threaded companion flanges for small male and female joints are furnished with plain face and are threaded with American National Standard Locknut Thread (NPSL).

(2) Raised portion of full face may be furnished unless otherwise specified on order.

(3) Large male and female faces and large tongue and groove are not applicable to Class 150 because of potential dimensional conflicts.

(4) Height of raised face is either 2 mm or 7 mm.

(5) Height of large and small male and tongue is 7 mm.

(6) Depth of groove or female is 5 mm.

THREAD

THREAD AND STANDARDS FOR ASME FLANGES(ASME B2.1)

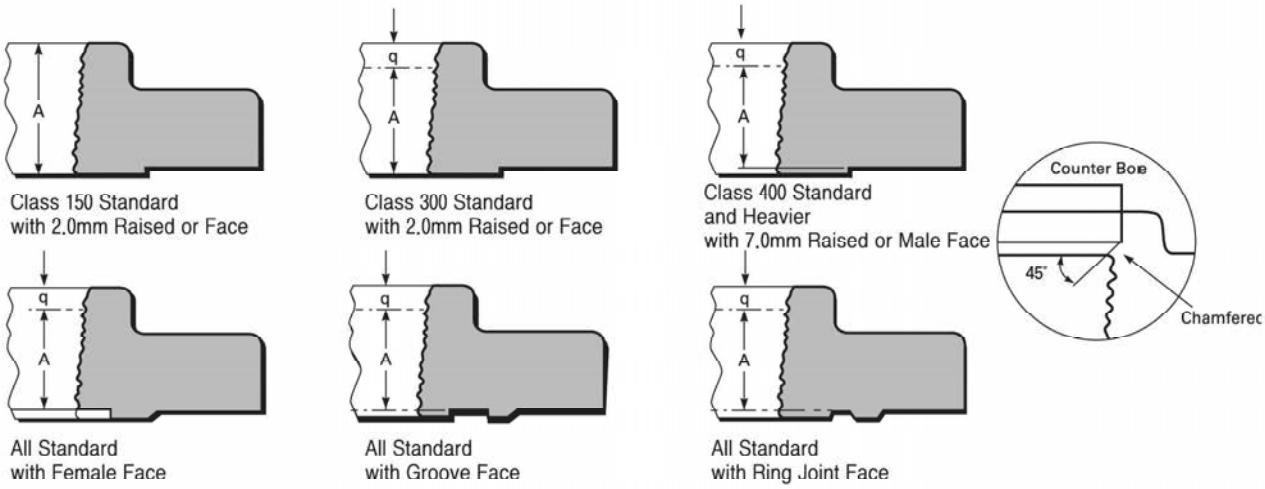

ASME B16.5 FORGED FLANGES

Unit : mm

Nominal Pipe Size	A-THREAD LENGTHS						
	Class 150	Class 300	Class 400	Class 600	Class 900	Class 1500	Class 2500
1/2	15.9	15.9	15.9	15.9	22.2	22.2	28.6
3/4	15.9	15.9	15.9	15.9	25.4	25.4	31.8
1	17.5	17.5	17.5	17.5	28.6	28.6	34.9
1 1/4	20.7	20.7	20.7	20.7	30.2	30.1	38.1
1 1/2	22.2	22.2	22.2	22.2	31.8	31.8	44.5
2	25.4	28.6	28.6	28.6	38.1	38.1	50.8
2 1/2	28.6	31.8	31.8	31.8	47.6	47.6	57.2
3	30.1	31.8	34.9	34.9	41.3	50.8	63.5
3 1/2	31.8	36.5	39.7	39.7	-	-	-
4	33.4	36.5	36.5	41.3	47.6	57.2	69.9
5	36.5	42.9	42.9	47.6	54.0	63.5	76.2
6	39.7	46.1	46.1	50.8	57.2	69.9	82.6
8	44.5	50.8	50.8	60.3	63.5	76.2	95.3
10	49.2	55.6	55.6	65.1	71.5	84.2	108.0
12	55.6	60.3	60.3	69.9	76.2	92.1	120.7
14	57.2	63.5	63.5	73.0	82.6	-	-
16	63.5	68.3	68.3	77.8	85.7	-	-
18	68.3	69.9	69.9	79.4	88.9	-	-
20	69.9	73.0	73.0	82.6	92.1	-	-
24	82.6	82.6	82.6	92.1	101.6	-	-

Notes :

(1) Except flanges with small Male/Female Face(on pipe end), threaded flanges, have an American National Standard taper pipe thread conforming to ASME B2.1

(2) The thread is concentric with the axis of the flange and variations in alignment do not exceed 0.06(1.6mm)in. per foot(0.5 percent)

(3) Class 150 flanges are made without counterbore. The threads are chamfered approximately to the major diameter of the thread at the back of the flange at an angle of approximately 45degrees with the axis of the thread. The chamfer is concentric with the thread and include in the measurement of the thread length.

(4) Class 300 and higher pressure flanges are made with a counterbore at the back of the flange. The threads are chamfered to the diameter of the counterbore at an angle of approximately 45 degrees with the axis of the thread. The counterbore and chamfer are concentric with the thread.

(5) The minimum length of effective thread in reducing flanges is at least equal to dimension Q of the corresponding class of threaded flanges as shown in the above tables. Threads do not necessarily extend to the face to the flange.

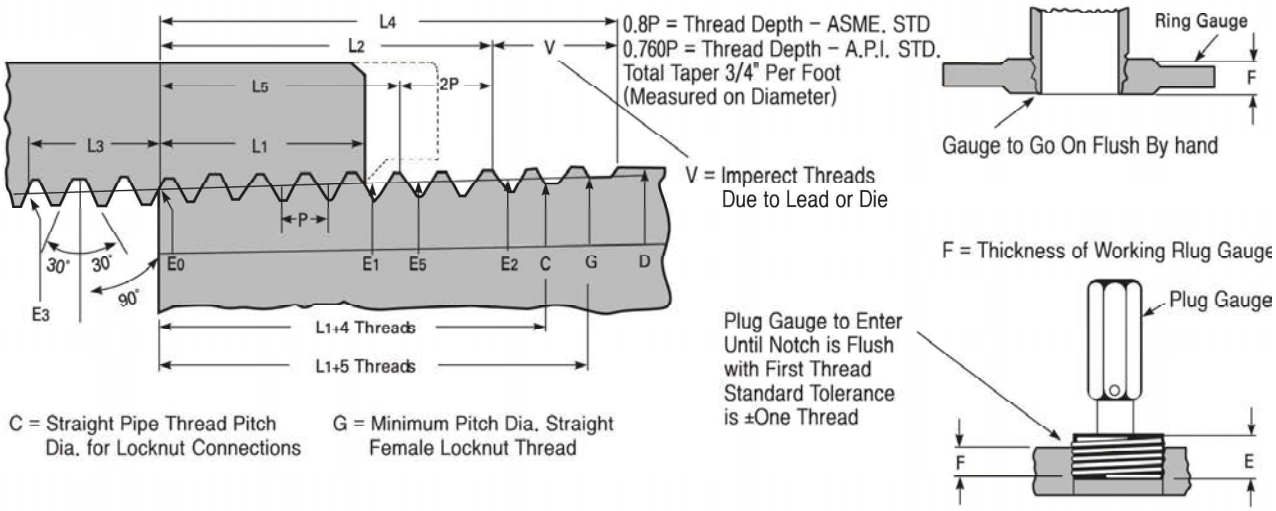

ASME B16.36 FORGED FLANGES

Unit : mm

Nominal pipe Size	Outside Diameter of Pipe	Threads Per inch	Pitch of Thread	Pitch Diameter at Beginning of External Threads	Handtight Engagement		Effective Thread External		Wrench Make-Up Length for internal Threaded		Over all Length External Threads
					Length	Pitch Diameter	Length	Pitch Diameter	Length	Pitch Diameter	
	D	N	P	E_0	L_1	E_1	L_2	E_2	L_3	E_3	L
1/2	21	14	1.8	19.3	8.1	19.8	13.6	20.1	5.4	18.9	19.9
3/4	27	14	1.8	24.6	8.6	25.1	13.9	25.4	5.4	24.2	20.2
1	33	11 1/2	2.2	30.8	10.2	31.5	17.3	31.9	6.6	30.4	25.0
1 1/4	42	11 1/2	2.2	39.6	10.7	40.2	18.0	40.7	6.6	39.1	25.6
1 1/2	48	11 1/2	2.2	45.6	10.7	46.3	18.4	46.8	6.6	45.2	26.0
2	60	11 1/2	2.2	57.6	11.1	58.3	19.2	58.8	6.6	57.2	26.9
2 1/2	73	8	3.2	69.1	17.3	70.2	28.9	70.9	6.4	68.7	39.9
3	89	8	3.2	84.9	19.5	86.1	30.5	86.8	6.4	84.5	41.5
3 1/2	102	8	3.2	97.5	20.9	98.8	31.8	99.5	6.4	97.1	42.8
4	114	8	3.2	110.1	21.4	111.4	33.0	112.2	6.4	109.7	44.0
4 1/2	127	8	3.2	122.7	22.2	124.1	34.3	123.0	-	-	-
5	141	8	3.2	136.9	23.8	138.4	35.7	139.2	6.4	136.5	46.7
6	168	8	3.2	163.7	24.3	165.3	38.4	166.1	6.4	163.3	49.4
7	194	8	3.2	189.0	25.4	190.6	41.0	189.3	-	-	-
8	219	8	3.2	214.2	27.0	215.9	43.5	216.9	6.4	213.8	54.5
9	244	8	3.2	239.5	28.7	241.2	46.0	239.8	-	-	-
10	273	8	3.2	267.9	30.7	269.8	48.9	270.9	6.4	267.5	59.9
11	298	8	3.2	293.1	32.6	295.1	51.4	293.5	-	-	-
12	324	8	3.2	318.3	34.5	320.5	54.0	321.7	6.4	317.9	65.0
14	356	8	3.2	349.9	39.7	352.4	57.2	353.5	6.4	349.5	68.2
15	381	8	3.2	375.1	42.8	377.8	59.7	375.6	-	-	-
16	406	8	3.2	400.4	46.0	403.2	62.2	404.3	6.4	400.0	73.2
17	432	8	3.2	425.6	48.3	428.6	64.8	426.1	-	-	-
18	457	8	3.2	450.9	50.8	454.0	67.3	455.1	6.4	450.5	78.3
20	508	8	3.2	501.3	54.0	504.7	72.4	505.9	6.4	500.9	83.4
22	559	8	3.2	551.8	57.2	555.4	77.5	552.4	-	-	-
24	610	8	3.2	602.3	60.3	606.1	82.6	607.5	6.4	601.9	93.6

PIPE & FITTINGS
WALL THICKNESS SCHEDULES DIMENSION

Nominal Pipe Size		Outside Diam.	Well	Nominal Wall Thickness (Stainless steel)					Nominal Wall Thickness (Carbon & Low Alloy Steel)			
A	B		I.D	S5S*	S10S*	S20S	S40S	S80S	S5	S10	S20	S30
6	1/8	10.3	W.T	-	1.24	-	1.73	2.41	-	1.24	-	1.45
			I.D	-	7.82	-	6.84	5.48	-	7.82	-	7.40
8	1/4	13.7	W.T	-	1.65	-	2.24	3.02	-	1.65	-	1.85
			I.D	-	10.40	-	9.22	7.66	-	10.40	-	10.00
10	3/8	17.1	W.T	-	1.65	-	2.31	3.20	-	1.65	-	1.85
			I.D	-	13.80	-	12.48	10.70	-	13.80	-	13.40
15	1/2	21.3	W.T	1.65	2.11	-	2.77	3.73	1.65	2.11	-	2.41
			I.D	18.00	17.08	-	15.76	13.84	18.00	17.08	-	16.48
20	3/4	26.7	W.T	1.65	2.11	-	2.87	3.91	1.65	2.11	-	2.41
			I.D	23.40	22.48	-	20.96	18.88	23.40	22.48	-	21.88
25	1	33.4	W.T	1.65	2.77	-	3.38	4.55	1.65	2.77	-	2.90
			I.D	30.10	27.86	-	26.64	24.30	30.10	27.86	-	27.60
32	1 1/4	42.2	W.T	1.65	2.77	-	3.56	4.85	1.65	2.77	-	2.97
			I.D	38.90	36.66	-	35.08	32.50	38.90	36.66	-	36.26
40	1 1/2	48.3	W.T	1.65	2.77	-	3.68	5.08	1.65	2.77	-	3.18
			I.D	45.00	42.76	-	40.94	38.14	45.00	42.76	-	41.94
50	2	60.3	W.T	1.65	2.77	-	3.91	5.54	1.65	2.77	-	3.18
			I.D	57.00	54.76	-	52.48	49.22	57.00	54.76	-	53.94
65	2 1/2	73.0	W.T	2.11	3.05	-	5.16	7.01	2.11	3.05	-	4.78
			I.D	68.78	66.90	-	62.68	58.98	68.78	66.90	-	63.44
80	3	88.9	W.T	2.11	3.05	-	5.49	7.62	2.11	3.05	-	4.78
			I.D	84.68	82.80	-	77.92	73.66	84.68	82.80	-	79.34
90	3 1/2	101.6	W.T	2.11	3.05	-	5.74	8.08	2.11	3.05	-	4.78
			I.D	97.38	95.50	-	90.12	85.44	97.38	95.50	-	92.04
100	4	114.3	W.T	2.11	3.05	-	6.02	8.56	2.11	3.05	-	4.78
			I.D	110.08	108.20	-	102.26	97.18	110.08	108.20	-	104.74
125	5	141.3	W.T	2.77	3.40	-	6.55	9.53	2.77	3.40	-	-
			I.D	135.76	134.50	-	128.20	122.24	135.76	134.50	-	-
150	6	168.3	W.T	2.77	3.40	-	7.11	10.97	2.77	3.40	-	-
			I.D	162.76	161.50	-	154.08	146.36	162.76	161.50	-	-
200	8	219.1	W.T	2.77	3.76	-	8.18	12.70	2.77	3.76	6.35	7.04
			I.D	213.56	211.58	-	202.74	193.70	213.56	211.58	206.40	205.02
250	10	273.1	W.T	3.40	4.19	-	9.27	12.70	3.40	4.19	6.35	7.80
			I.D	266.30	264.72	-	254.56	247.70	266.30	264.72	260.40	257.50
300	12	323.9	W.T	3.96	4.57	-	9.53	12.70	3.96	4.57	6.35	8.38
			I.D	315.98	314.76	-	304.84	298.50	315.98	314.76	311.20	307.14
350	14	355.6	W.T	3.96	4.78	-	9.53	12.70	3.96	6.35	7.92	9.53
			I.D	347.68	346.04	-	336.54	330.20	347.68	342.90	339.76	336.54
400	16	406.4	W.T	4.19	4.78	-	9.53	12.70	4.19	6.35	7.92	9.53
			I.D	398.02	396.84	-	387.34	381.00	398.02	393.70	390.56	387.34
450	18	457.0	W.T	4.19	4.78	-	9.53	12.70	4.19	6.35	7.92	11.13
			I.D	448.62	447.44	-	437.94	431.60	448.62	444.30	441.16	434.74
500	20	508.0	W.T	4.78	5.54	7.90	9.53	12.70	4.78	6.35	9.53	12.70
			I.D	498.44	496.92	492.20	488.94	482.60	498.44	495.30	488.94	482.60
550	22	559.0	W.T	4.78	5.54	-	-	-	4.78	6.35	9.53	12.70
			I.D	549.44	547.92	-	-	-	549.44	546.30	539.94	533.60
600	24	610.0	W.T	5.54	6.35	-	9.53	12.70	5.54	6.35	9.53	14.27
			I.D	598.92	597.30	-	590.94	584.60	598.92	597.30	590.94	581.46
650	26	660.4	W.T	-	-	-	9.53	12.70	-	7.92	12.70	-
			I.D	-	-	-	641.34	635.00	-	644.56	635.00	-
700	28	711.2	W.T	-	-	-	-	-	-	7.92	12.70	15.88
			I.D	-	-	-	-	-	-	695.36	685.80	679.44
750	30	762.0	W.T	6.35	7.92	-	-	-	6.35	7.92	12.70	15.88
			I.D	749.30	746.16	-	-	-	749.30	746.16	736.60	730.24
800	32	813.0	W.T	-	-	-	-	-	-	7.92	12.70	15.88
			I.D	-	-	-	-	-	-	797.16	787.60	781.24
850	34	864.0	W.T	-	-	-	-	-	-	7.92	12.70	15.88
			I.D	-	-	-	-	-	-	848.16	838.60	832.24
900	36	914.0	W.T	-	-	-	-	-	-	7.92	12.70	15.88
			I.D	-	-	-	-	-	-	898.16	888.60	882.24
950	38	965.0	W.T	-	-	-	-	-	-	-	-	-
			I.D						-	-	-	-
1000	40	1016.0	W.T	-	-	-	-	-	-	-	-	-
			I.D						-	-	-	-
1050	42	1067.0	W.T	-	-	-	-	-	-	-	-	-
			I.D						-	-	-	-
1100	44	1118.0	W.T	-	-	-	-	-	-	-	-	-
			I.D						-	-	-	-
1150	46	1168.0	W.T	-	-	-	-	-	-	-	-	-
			I.D						-	-	-	-
1200	48	1219.0	W.T	-	-	-	-	-	-	-	-	-
			I.D	-	-	-	-	-	-	-	-	-

▶ Carbon & Low Alloy Steel (B36.10M)

The wall thickness shown represent nominal or average wall diamensions which are subject to a-12½% mill tolerance.

Note that schedule 40 in. sizes 12" (304.8mm) and larger and that schedule 80 in sizes10" (254mm) and larger do not agree with schedules 40S and 80S of ASME B36. 19 nor with standard weight and extra strong respectively.

Nominal Wall Thickness (Carbon & Low Alloy Steel)										Outside Diam.	Nominal Pipe Size	
STD	S40	S60	XS	S80	S100	S120	S140	S160	XXS		A	B
1.73	1.73	-	2.41	2.41	-	-	-	-	-	10.3	6	1/8
6.84	6.84	-	5.48	5.48	-	-	-	-	-			
2.24	2.24	-	3.02	3.02	-	-	-	-	-	13.7	8	1/4
9.22	9.22	-	7.66	7.66	-	-	-	-	-			
2.31	2.31	-	3.20	3.20	-	-	-	-	-	17.1	10	3/8
12.48	12.48	-	10.70	10.70	-	-	-	-	-			
2.77	2.77	-	3.73	3.73	-	-	-	4.78	7.47	21.3	15	1/2
15.76	15.76	-	13.84	13.84	-	-	-	11.74	6.36			
2.87	2.87	-	3.91	3.91	-	-	-	5.56	7.82	26.7	20	3/4
20.96	20.96	-	18.88	18.88	-	-	-	15.58	11.06			
3.38	3.38	-	4.55	4.55	-	-	-	6.35	9.09	33.4	25	1
26.64	26.64	-	24.30	24.30	-	-	-	20.70	15.22			
3.56	3.56	-	4.85	4.85	-	-	-	6.35	9.70	42.2	32	1 1/4
35.08	35.08	-	32.50	32.50	-	-	-	29.50	22.80			
3.68	3.68	-	5.08	5.08	-	-	-	7.14	10.15	48.3	40	1 1/2
40.94	40.94	-	38.14	38.14	-	-	-	34.02	28.00			
3.91	3.91	-	5.54	5.54	-	-	-	8.74	11.07	60.3	50	2
52.48	52.48	-	49.22	49.22	-	-	-	42.82	38.16			
5.16	5.16	-	7.01	7.01	-	-	-	9.53	14.02	73.0	65	2 1/2
62.68	62.68	-	58.98	58.98	-	-	-	53.94	44.96			
5.49	5.49	-	7.62	7.62	-	-	-	11.13	15.24	88.9	80	3
77.92	77.92	-	73.66	73.66	-	-	-	66.64	58.42			
5.74	5.74	-	8.08	8.08	-	-	-	12.70	-	101.6	90	3 1/2
90.12	90.12	-	85.44	85.44	-	-	-	76.20	-			
6.02	6.02	-	8.56	8.56	-	11.13	-	13.49	17.12	114.3	100	4
102.26	102.26	-	97.18	97.18	-	92.04	-	87.32	80.06			
6.55	6.55	-	9.53	9.53	-	12.70	-	15.88	19.05	141.3	125	5
128.20	128.20	-	122.24	122.24	-	115.90	-	109.54	103.20			
7.11	7.11	-	10.97	10.97	-	14.27	-	18.26	21.95	168.3	150	6
154.08	154.08	-	146.36	146.36	-	139.76	-	131.78	124.40			
8.18	8.18	10.31	12.70	12.70	15.09	18.26	20.62	23.01	22.23	219.1	200	8
202.74	202.74	198.48	193.70	193.70	188.92	182.58	177.86	173.08	174.64			
9.27	9.27	12.70	12.70	15.09	18.26	21.44	25.40	28.58	25.40	273.1	250	10
254.56	254.56	247.70	247.70	242.92	236.58	230.22	222.30	215.94	222.30			
9.53	10.31	14.27	12.70	17.48	21.44	25.40	28.58	33.32	25.40	323.9	300	12
304.84	303.28	295.36	298.50	288.94	281.02	273.10	266.74	257.26	273.10			
9.53	11.13	15.09	12.70	19.05	23.83	27.79	31.75	35.71	-	355.6	350	14
336.54	333.34	325.42	330.20	317.50	307.94	300.02	292.10	284.18	-			
9.53	12.70	16.66	12.70	21.44	26.19	30.96	36.53	40.49	-	406.4	400	16
387.34	381.00	373.08	381.00	363.52	354.02	344.48	333.34	325.42	-			
9.53	14.27	19.05	12.70	23.83	29.36	34.93	39.67	45.24	-	457.0	450	18
437.94	428.46	418.90	431.60	409.34	398.28	387.14	377.66	366.52	-			
9.53	15.09	20.62	12.70	26.19	32.54	38.10	44.45	50.01	-	508.0	500	20
488.94	477.82	466.76	482.60	455.62	442.92	431.80	419.10	407.98	-			
9.53	-	22.23	12.70	28.58	34.93	41.28	47.63	53.98	-	559.0	550	22
539.94	-	514.54	533.60	501.84	489.14	476.44	463.74	451.04	-			
9.53	17.48	24.61	12.70	30.96	38.89	46.02	52.37	59.54	-	610.0	600	24
590.94	575.04	560.78	584.60	548.08	532.22	517.96	505.26	490.92	-			
9.53	-	-	12.70	-	-	-	-	-	-	660.4	650	26
641.34	-	-	635.00	-	-	-	-	-	-			
9.53	-	-	12.70	-	-	-	-	-	-	711.2	700	28
692.14	-	-	685.80	-	-	-	-	-	-			
9.53	-	-	12.70	-	-	-	-	-	-	762.0	750	30
742.94	-	-	736.60	-	-	-	-	-	-			
9.53	17.48	-	12.70	-	-	-	-	-	-	813.0	800	32
793.94	778.04	-	787.60	-	-	-	-	-	-			
9.53	17.48	-	12.70	-	-	-	-	-	-	864.0	850	34
844.94	829.04	-	838.60	-	-	-	-	-	-			
9.53	19.05	-	12.70	-	-	-	-	-	-	914.0	900	36
894.94	875.90	-	888.60	-	-	-	-	-	-			
9.53	-	-	12.70	-	-	-	-	-	-	965.0	950	38
945.94	-	-	939.60	-	-	-	-	-	-			
9.53	-	-	12.70	-	-	-	-	-	-	1016.0	1000	40
996.94	-	-	990.60	-	-	-	-	-	-			
9.53	-	-	12.70	-	-	-	-	-	-	1067.0	1050	42
1047.94	-	-	1041.60	-	-	-	-	-	-			
9.53	-	-	12.70	-	-	-	-	-	-	1118.0	1100	44
1098.94	-	-	1092.60	-	-	-	-	-	-			
9.53	-	-	12.70	-	-	-	-	-	-	1168.0	1150	46
1148.94	-	-	1142.60	-	-	-	-	-	-			
9.53	-	-	12.70	-	-	-	-	-	-	1219.0	1200	48
1199.94	-	-	1193.60	-	-	-	-	-	-			

▶ Stainless steel (B 36.19M)

The wall thickness shown represent nominal or average wall dimensions which are subject to a-12½% mill tolerance.

+Sizes 14" (355.6mm) through 30" (762.0mm) are not at publication date covered in B36 19, and dimansions listed are those commonly used in the industry.

*Schedules 5S and 10S wall thicknesses do not permit threading in accordance with ASME B2 1.

**Note that schedule 40S and schedule 80S in these sizes do not agree with schedule 40 and schedule 80 of ASME B36.10. and that they are identical to standard weight and extra strong respectively of ASME B36. 10.

TOLERANCE

ASME B16.5-2003ED FORGED FLANGES (Reversion of ASME B16.5-1996)

SOLID FLANGE

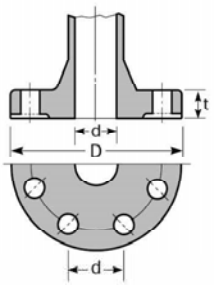

SLIP-ON FLANGE

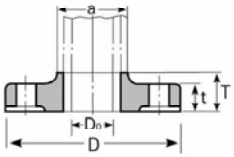

WELDING NECK FLANGE

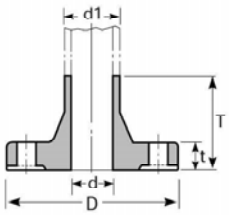

TYPE of GASKET SURFACE

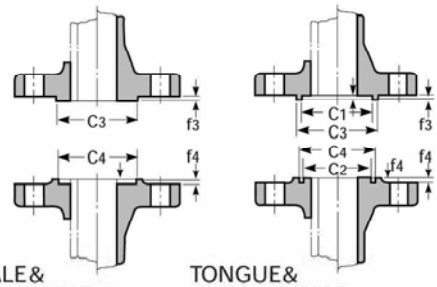

MALE& FEMALE TYPE

TONGUE& GROOVE TYPE

WELDING NECK

Place	Range	Tolerance (mm)
Outside Diameter	When O.D is 24″ or Less	±1.6*(±0.063in)
	When O.D is Over 24″	±3.2*(±0.125in)
Inside Diameter	10″ and Smaller	±1.0 (±0.03in)
	12″ thru 18″	±1.5 (±0.16in)
	20″ and Larger	+3.0 (+0.12in) -1.5 (-0.06in)
Diameter of Contact Face	2.0mm Raised Face (Outside)	±1.0 (±0.03in)
	7.0mm Raised Face (Outside)	±0.5 (±0.02in)
	Tongue, goove, female (Inside & Outside)	±0.5 (±0.02in)
Diameter of Hub at Base	When Hub Base is 24″ or Smaller	±1.6* (±0.063in)
	When Hub Base is Over 24″	±3.2* (±0.125in)
Diameter of Hub at Welding Point	When O.D is 5″ or Less	+2.0 (+0.09in) -1.0 (-0.03in)
	When O.D is Over 6″	+4.0 (+0.16in) -1.0 (-0.03in)
Drilling	Bolt Circle Diameter	±1.5 (±0.06in)
	Bolt to Bolt Hole	±0.8 (±0.03in)
	Eccentricity of Bolt Circle with Respect to Facing	NPS≤2 1/2″ 0.8 (0.03in) Max. NPS≥3″ 1.5 (0.06in) Max.
	Eccentricity of Bolt Circle with Respect to Bore	0.8 Max.* (0.03in)
	Eccentricity of Facing with Respect to Bore	0.8 Max.* (0.03in)
Thickness	When O.D is 18″ or Less	+3.0 (+0.12in) -0.0 (-0.0in)
	When O.D is Over 20″	+5.0 (+0.19in) -0.0(-0.0in)
Length Thru Hub	When O.D is 4″ or Less	±1.5 (±0.06in)
	5″ thru 10″	+1.5 (+0.06in) -3.0 (-0.12in)
	When O.D is Over 12″	+3.0 (+0.12in) -5.0 (-0.18in)

Notes :

* This tolerance is not covered in ASME B 16.5, but maker's option.

THREAD, SOCKET-WELDING, SLIP-ON, LAP JOINT AND BLIND

Place		Range	Tolerance (mm)
Outside Diameter		When O.D is 24″ or Less	±1.6*(±0.063in)
		When O.D is Over 24″	±3.2*(±0.125in)
Inside Diameter	Counter-bores Threaded	When O.D is 10″ or Less	+1.0 (+0.03in) -0.0 (-0.0in)
		When O.D is Over 12″	+1.5 (+0.06in) -0.0 (-0.0in)
	Counter-bores Socket Welding	1/2≤ NPS ≤3	±0.25 (±0.01in)
	Lap joint Slip-On Socket Welding	When O.D is 10″ or Less	+1.0 (+0.03in) -0.0 (-0.0in)
		When O.D is Over 12″	+1.5 (+0.06in) -0.0 (-0.0in)
Diameter of Contact Face		2.0mm Raised Face (Outside)	±1.0 (±0.03in)
		7.0mm Raised Face (Outside)	±0.5 (±0.02in)
		Tongue, goove, female (Inside & Outside)	±0.5 (±0.02in)
Diameter of Hub at Base		When Hub Base is 24″ or Smaller	±1.6* (±0.063in)
		When Hub Base is Over 24″	±3.2* (±0.125in)
Drilling		Bolt Circle Diameter	±1.5 (±0.06in)
		Bolt to Bolt Hole	±0.8 (±0.03in)
		Eccentricity of Bolt Circle with Respect to Facing	NPS≤2 1/2″ ±0.8 (0.03in) Max. NPS≥3″ ±1.5 (0.03in) Max.
		Eccentricity of Bolt Circle with Respect to Bore	0.8 Max.* (0.03in)
		Eccentricity of Facing with Respect to Bore	0.8 Max.* (0.03in)
Thickness		When O.D is 18″ or Less	+3.0 (+0.12in) -0.0 (-0.0in)
		When O.D is Over 20″	+5.0 (+0.19in) -0.0 (-0.0in)
Length Thru Hub		When O.D is 4″ or Less	±1.5 (±0.06in)
		5″ thru 10″	+1.5 (+0.06in) -3.0 (-0.12in)
		When O.D is Over 12″	+3.0 (+0.12in) -5.0 (-0.18in)

ASME B16.5 FORGED FLANGES

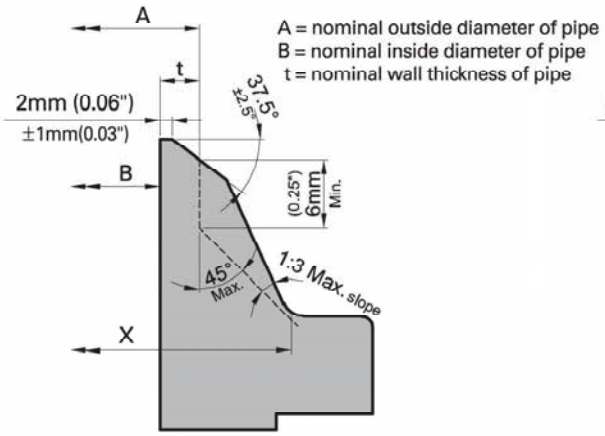

Bevel for Wall Thickness t
From 5mm to 22mm inclusive
(0.19in) (0.88in)

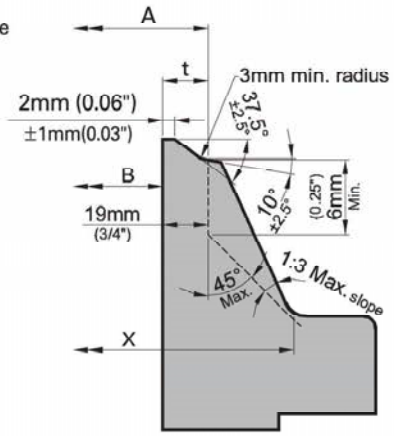

Bevel for Wall Thickness t
Greater Than 22mm
(0.88in)

Notes :

When the thickness of the hub at the bevel is greater than that of the pipe to which the flange is joined and the additional thickness is provided on the outside diameter, a traper weld having a slope not exceeding 1 to 3may be employed or, alternatively, the greater outside diameter may be tapered at the same maximum slope or less, from a point on the welding bevel equal to the outside diameter of the mating pipe. Similarly, when the greater thickness is provided on the inside of the flange, it shall be taper-bored from the welding end at a slope not exceeding 1 t 3.

When flanges covered by this standard are intended for services with light wall, higher strength pipe, the thickness of the hub at bevel may be greater than that of the pipe to which the flange is joined. Under these conditions, a single taper hub may be provided, and the outside diameter of the hub at the base(Dimension X) may also be modified.

The additional thickness may be provided on either inside or outside or partially on each side, but the total additional thickness shall not exceed one-half times the nominal wall thickness of intended mating pipe.

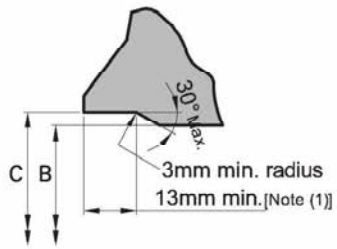

(a)Inside Contour for Use With Rectangular Backing Ring

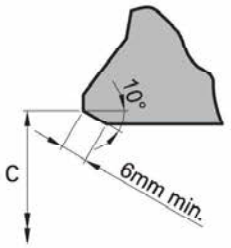

Inside Contour for Use With Taper Backing Ring

- A = nominal outside diameter of welding end, mm
- B = nominal inside diameter of pipe(=A-2t),mm
- C= A -0.79 - 1.75t - 0.25, mm
- t = niminal wall thickness of pipe, mm
- 0.79mm = minus tolerance on outside diameter of pope to ASTM A106, etc.
- 1.75t = 87.5% of nominal wall (permitted by ASTM A106,etc.) multiplied by to conver into terms of daimeter
- 0.25mm = plus tolerance on diameter C, mm.

Note (1) 13mm depth based on use of 19mm wide backing ning

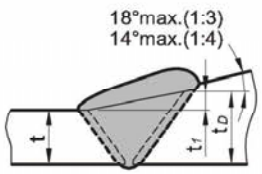

(a)Bevel for Outside Thickness

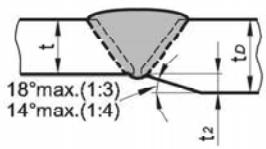

(b)Bevel for inside Thickness

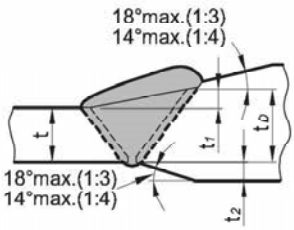

(c)Bevel for Conbined Thickness

Notes :

(1) When the materials joined have equal minimum specified yield strength, there shall be no restriction on the minimum slope.

(2) Neither t_1, t_2, nor their sum($t_1 + t_2$) shall exceed 0.5t.

(3) When the minimum specified yield strengths of the sections to be joined are unequal, the value of t_D shall at least equal times the ratio of minimum specified yield strength of the pipe to minimum specified yield strength of the flange.

ASTM Material Chemical Composition & Mechanical Requirements

ASTM Grade	UNS Designation		Chemical Composition (%)												Mechanical Requirements				
			C	Si	Mn	P	S	Ni	Cr	Mo	Cu	V	Nb	N	Y.S[7] (Mpa)	T.S (Mpa)	E.L (%)	R.A (%)	H.B
A105	K03504	Max.	0.35	0.35	1.05	0.035	0.040	0.40	0.30	0.12	0.40	0.08							187
		Min.		0.10	0.60										250	485	22	30	
A266 GR.1	K03506	Max.	0.30	0.35	1.05	0.025	0.025									585			
		Min.		0.15	0.40										205	415	23	38	
A266 GR.2	K03506	Max.	0.30	0.35	1.05	0.025	0.025									655			
		Min.		0.15	0.40										250	485	20	33	
A266 GR.3	K05001	Max.	0.35	0.35	1.35	0.025	0.025									690			
		Min.		0.15	0.80										260	515	19	30	
A266 GR.4	K03017	Max.	0.30	0.35	1.35	0.025	0.025									655			
		Min.		0.15	0.80										250	485	20	33	
A350 LF.1	K03009	Max.	0.30	0.30	1.35	0.035	0.040	0.40	0.30	0.12	0.4	0.05				585			197
		Min.		0.15	0.60										205	415		38	
A350 LF.2	K03011	Max.	0.30	0.30	1.35	0.035	0.040	0.40	0.30	0.12	0.4	0.05				655			197
		Min.		0.15	0.60										250	485		30	
A694	K03014	Max.	0.26	0.35	1.40	0.025	0.025								F42:290 F46:315 F48:330 F50:345 F52:360 F56:385 F60:415 F65:450 F70:485	F42:415 F46:415 F48:425 F50:440 F52:455 F56:470 F60:515 F65:530 F70:565	F42~F65 :20 F70:18		
		Min.		0.15															
A182 F1	K12822	Max.	0.28	0.35	0.90	0.045	0.045			0.65									192
		Min.		0.15	0.60					0.44					275	485	20	30	143
A182 F5	K41545	Max.	0.15	0.50	0.60	0.030	0.030	0.50	6.00	0.65									217
		Min.			0.30				4.00	0.44					275	485	20	35	143
A182 F5a	K42544	Max.	0.25	0.50	0.60	0.040	0.030	0.50	6.00	0.65									248
		Min.							4.00	0.44					450	620	22	50	187
A182 F9	K90941	Max.	0.15	1.00	0.60	0.030	0.030		10.00	1.10									217
		Min.		0.50	0.30				8.00	0.90					380	585	20	40	179
A182 F91	K90901	Max.	0.12	0.50	0.60	0.020	0.010	0.40	9.50	1.05		0.25	0.10	0.07					248
		Min.	0.08	0.20	0.30	※Al 0.02 Ti 0.01 Zr 0.01			8.00	0.85		0.18	0.06	0.03	415	585	20	40	
A182 F11CL1	K11597	Max.	0.15	1.00	0.60	0.030	0.030		1.50	0.65									174
		Min.	0.05	0.50	0.30				1.00	0.44					205	415	20	45	121
A182 F11CL2	K11572	Max.	0.20	1.00	0.80	0.040	0.040		1.50	0.65									207
		Min.	0.10	0.50	0.30				1.00	0.44					275	485	20	30	143
A182 F11CL3	K11572	Max.	0.20	1.00	0.80	0.040	0.040		1.50	0.65									207
		Min.	0.10	0.50	0.30				1.00	0.44					310	515	20	30	156
A182 F12CL1	K11562	Max.	0.15	0.50	0.60	0.045	0.045		1.25	0.65									174
		Min.	0.05		0.30				0.80	0.44					220	415	20	45	121
A182 F12CL2	K11564	Max.	0.20	0.60	0.80	0.040	0.040		1.25	0.65									207
		Min.	0.10	0.10	0.30				0.80	0.44					275	485	20	30	143
A182 F22CL1	K21590	Max.	0.15	0.50	0.60	0.040	0.040		2.50	1.13									170
		Min.	0.05		0.30				2.00	0.87					205	415	20	35	
A182 F22CL3	K21590	Max.	0.15	0.50	0.60	0.040	0.040		2.50	1.13									207
		Min.	0.05		0.30				2.00	0.87					310	515	20	30	156
A182 F22V	K31838	Max.	0.15	0.10	0.60	0.015	0.010	0.25	2.50	1.10	0.20	0.35	0.07			780			237
		Min.	0.11		0.30	※B 0.002 Ca 0.015			2.00	0.90		0.25	※Ti 0.030		415	585	18	45	174
A350 LF3	K32025	Max.	0.20	0.35	0.90	0.035	0.040	3.70	0.30	0.12		0.03				655			197
		Min.		0.20				3.30							260	485		35	
A182 F304	S30400	Max.	0.08	1.00	2.00	0.045	0.030	11.00	20.00										
		Min.						8.00	18.00						205	515[8]	30	50	
A182 F304L	S30403	Max.	0.03	1.00	2.00	0.045	0.030	13.00	20.00										
		Min.						8.00	18.00						170	485[9]	30	50	
A182 F304H	S30409	Max.	0.10	1.00	2.00	0.045	0.030	11.00	20.00										
		Min.	0.04					8.00	18.00						205	515[8]	30	50	
A182 F310	S31000	Max.	0.25	1.00	2.00	0.045	0.030	22.00	26.00										
		Min.						19.00	24.00						205	515[8]	30	50	
A182 F316	S31600	Max.	0.08	1.00	2.00	0.045	0.030	14.00	18.00	3.00									
		Min.						10.00	16.00	2.00					205	515[8]	30	50	
A182 F316L	S31603	Max.	0.03	1.00	2.00	0.045	0.030	15.00	18.00	3.00									
		Min.						10.00	16.00	2.00					170	485[9]	30	50	
A182 F316H	S31609	Max.	0.10	1.00	2.00	0.045	0.030	14.00	18.00	3.00									
		Min.	0.04					10.00	16.00	2.00					205	515[8]	30	50	
A182 F317	S31700	Max.	0.08	1.00	2.00	0.045	0.030	15.00	20.00	4.00									
		Min.						11.00	18.00	3.00					205	515[8]	30	50	
A182 F317L	S31703	Max.	0.03	1.00	2.00	0.045	0.030	15.00	20.00	4.00									
		Min.						11.00	18.00	3.00					170	485[9]	30	50	
A182 F321	S32100	Max.	0.08	1.00	2.00	0.045	0.030	12.00	19.00										
		Min.						9.00	17.00	※Ti C%*5~0.7					205	515[8]	30	50	
A182 F347	S34700	Max.	0.08	1.00	2.00	0.045	0.030	13.00	20.00				1.10						
		Min.						9.00	17.00				C*10		205	515[8]	30	50	
A182 F6aCL1	S41000	Max.	0.15	1.00	1.00	0.040	0.030	0.50	13.50										207
		Min.							11.50						275	485	18	35	143
A182 F51	S31803	Max.	0.03	1.00	2.00	0.030	0.020	6.50	23.00	3.50				0.20					
		Min.						4.50	21.00	2.50				0.08	450	620	25	45	
A182 F53	S32750	Max.	0.03	0.80	1.20	0.035	0.020	8.00	26.00	5.00	0.50			0.32					310
		Min.						6.00	24.00	3.00				0.24	550[10]	800[10]	15		

Notes :

1) All values ar maximum unless otherwise stated

2) The present grade F5a(0.25 max carbon) previous to 1955 was assigned the identification symbol F5. Identification symbol F5 in 1955 was assigned to the 0.15 max carbon grade to be consistent with ASTM specifications for other products such as pipe, tubing, bolting, welding fittings, and the like

Material Group No.	GROUP 1 MATERIALS			PRODUCT FORMS			
	Nominal Designation Steel	Forgings		Castings		Plates	
		Spec.-Gr.	Notes	Spec.-Gr.	Notes	Spec.-Gr.	Notes
1.1	C-Si	A105		A216-WCB		A515.70	
	C-Mn-Si	A350-LF2				A516.70	
	3 1/2 Ni	A350-LF3					
1.2	C-Mn-Si			A216-WCC			
				A352-LCC			
	2 1/2 Ni			A352-LC2		A203-B	
	3 1/2 Ni			A352-LC3		A203-E	
1.3	C-Si			A352-LCB (1)		A515-65	
	C-Mn-Si					A516-65	
	2 1/2 Ni					A203-A	
	3 1/2 Ni					A203-D	
1.4	C-Si	A350-LF1 CL.1				A515-60	
	C-Mn-Si					A516-60	
1.5	C-1/2 Mo	A182-F1				A204-A	
						A204-B	
1.7	1/2Cr-1/2Mo	A182-F2					
	Ni-1/2Cr-1/2Mo			A217-WC4			
	3/4Ni-3/4Cr-1Mo			A217-WC5			
1.9	1/4Cr-1/2Mo			A217-WC6			
	1 1/4Cr-1/2Mo-Si	A182-11 CL.2				A378-11 CL.2	
1.10	2 1/4Cr-1Mo	A182-F22 CL.3		A217-WC9		A378-22 CL.2	
1.13	5 Cr-1/2Mo	A181-F5a		A217-C5			
1.14	9 Cr-1 Mo	A182-F9		A217-C12			

	GROUP 2 MATERIALS		PRODUCT FORMS	
2.1	18 Cr-8Ni	A182-F304	A351-CF3	A240-304
		A182-F304H	A351-CF8	A240-304H
2.2	16 Cr-12 Ni-2 Mo	A182-F316	A351-CF3M	A240-316
		A182-F316H	A351-CF8M	A240-316H
	18 Cr-13 Ni-3 Mo	A182-F317		A240-317
	19 Cr-10 Ni-3 Mo		A351-CG8M	
2.3	18 Cr-8 Ni	A182-F304L		A240-304L
	16 Cr-12 Ni-2 Mo	A182-F316L		A240-316L
2.4	18 Cr-10 Ni-Ti	A182-F321		A240-321
		A182-F321H		A240-321H
2.5	18 Cr-10 Ni-Cb	A182-F347		A240-347
		A182-F347H		A240-347H
		A182-F348		A240-348
		A182-F348H		A240-348H
2.6	23 Cr-12 Ni			A240-309H
2.7	25 Cr-20 Ni	A182-F310		A240-310H

3) For Grade F22V, rare earth metals(REM) may be added in place of calcium, subject to agreement between the producer and the purchaser. In that case the total amount of REM shall be determined and erported.
4) Grades F304, F304L, F316, and F316L shall have a nitrogen content of 0.10%
5) Grade F321 shall have a tianium content of not less than four times the carbon content and not more than 0.70%
6) Grade F347 shall have a columbium content of not less than ten times the carbon content and not more than 1.10%
7) Determined by the 0.2% offset method. For ferritic steels only, the 0.5% extension-under-load method may also be used.
8) For sections over 5 in.(130mm) in thickness, the minium tensile strength shall be 70 ksi(485 Mpa)
9) For sections over 5 in.(130mm) in thickness, the minium tensile strength shall be 65 ksi(450 Mpa)
10) For sections over 2 in.(50mm) in thickness, the minium tensile strength shall be 106 ksi(730 Mpa); the minimum yield strength shall be 75 ksi(515 Mpa)

STANDARD FINISH

STANDARD FINISHES for Face of Flange(ASME B16.5)

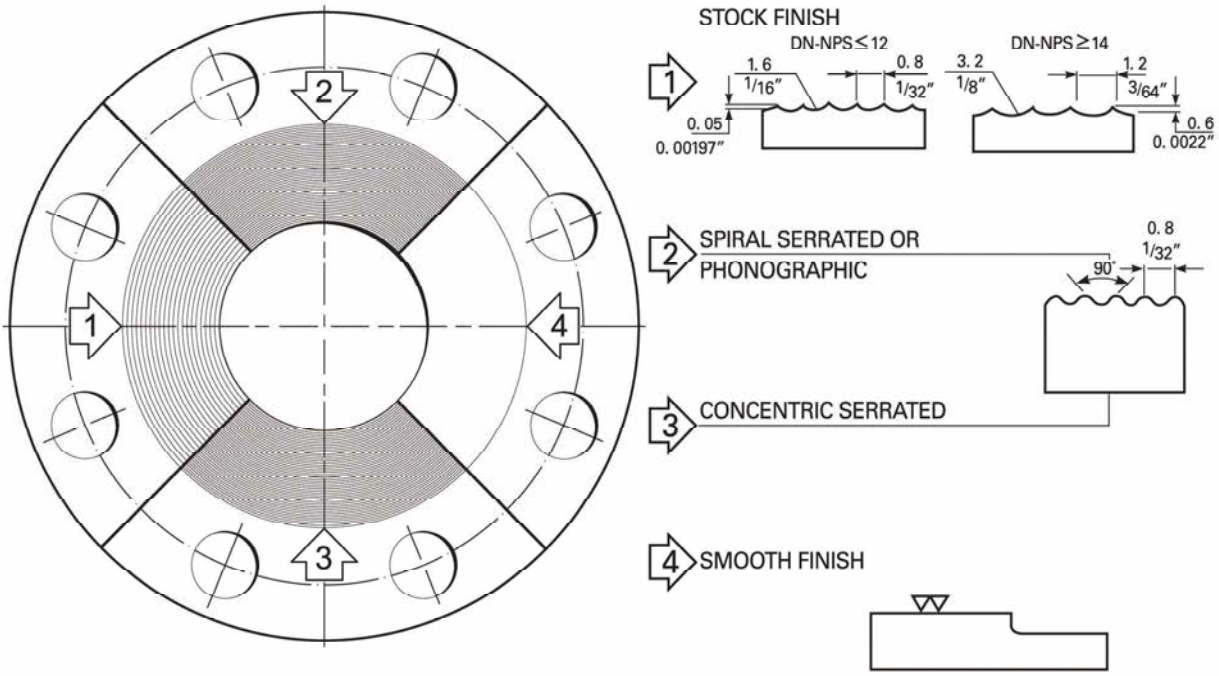

STOCK FINISH :

The most widely used of any gasket finish, because practically, is suitable for all ordinary service conditions. This is a continuous spiral groove. Flanges sizes 12"(304.8mm) and smaller are produced with a 1/16 "round-nosed tool at a feed of 1/32" per revolution. For sizes 14"(355.6mm) and larger, the finish is made with 1/8 "round-nosed tool at a feed of 3/64" per revolution.

SPIRAL SERRATED OR PHONOGRAPHIC:

This finish is produced by using a 90° round-nosed tool.

CONCENTRIC SERRATED:

This finish is produced by using a 90° round-nosed tool.

SMOOTH FINISH:

The cutting tool employed shall have an approximate 0.06" radius.
The resultant surface finish shall have a 125μ inch to 250μ inch(ASME B16.5 para 6.4.5)

1. RAISED FACE, AND LARGE MALE AND FEMALE

Either a serrated-concentric or serrated-spiral finish having from 3.2 to 6.3μm(125 to 250μin) average roughness shall be furnished. The cutting tool employed should have an approximate 0.06 inch(1.5mm) or larger radius. The resultant surface finish shall have a 125μ inch(3.2μm) to 500μ inch(12.5μm) approximate roughness.

2.TONGUE AND GROOVE, AND SMALL MALE AND FEMALE

The gasket contact surface finish shall not exceed 125μ inch(3.2μm) roughness.

3.RING JOINT

The side wall surface finish of the gasket groove shall not exceed 63μ inch(1.6μm) roughness.

4.BLIND

Blind flanges need not be faced in the center if when this center part is raised, its diameter is at least 1 inch smaller than the inside diameter of fittings of the corresponding pressure class. When the center part is depressed, its diameter is not greater than the inside diameter of the corresponding pressure class fittings. Machining of the depressed center is not required.

ANSI / MSS
Fittings

- Forged Steel Socket Welding Fitting
- Forged Steel Threaded Fitting
- Forged Steel Outlet Fitting

CONTENTS

1. Pressure Ratings

These fittings shall be designated as pressure class 2000, 3000 and 6000 fittings for threading and pressure class 3000, 6000 and 9000 for socket-welding. This designation identifies the fittings with their ratings as shown as follows, Table 1.

Table1 : Correlation of Fittings Class With Schedule Number of Wall Designation of pipe for Calculation of Ratings

Pressure Class Desination of Fitting	Type of Fitting	Pipe Used For Rating Basic	
		Schedule No.	Wall Designation
2000	Threaded	80	XS
3000	Threaded	160	–
6000	Threaded	–	XXS
3000	Socket-Wellding	80	XS
6000	Socket-Wellding	160	–
9000	Socket-Wellding	–	XXS

*This table is not intended to restrict the use of pipe of thinner or thicker wall with fittings. Pipe actually used may be thinner or thicker in nominal wall than that shown in Table 1. When thinner pipe is used its strength may govern the rating. When thicker pipe is used (e. g., for mechanical strength) the strength of the fitting governs the rating.

Table2 : Nomianl Wall Thickness of Schedule 160 and Double Extra Strong Pipe

NPS.	Schedule 160		XXS	
	in	mm	in	mm
1/8	0.124	3.15	0.190	4.83
1/4	0.145	3.68	0.238	6.05
3/8	0.158	4.01	0.252	6.40

2. Size Identification

The size of a fitting is identified by the normial pipe size.
For reducing fittings, the size of the largest run opening is to be given first, followed by the size of the oppening opposite of the same run. The branch size of a Tee given last where the case it a Cross, the largest sied-outlet is thirdly given, then the opening opposite.

TEE

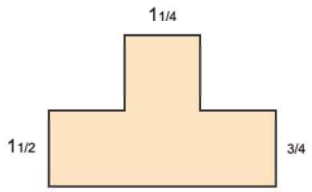

1 1/2 X 3/4 X 1 1/4

CROSS

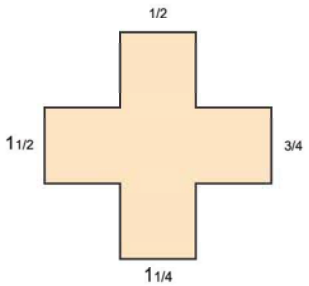

1 1/2 X 3/4 X 1 1/4 x 1/2

3. Threaded

Unless otherwise specified in inquiry, all threaded fittings are supplied with NPT threads(ANSI B2.1 American Standard Taper pipe Thread) for reference, other available threads are:

* ISO/R7, Pipe Threads for Gas List Tubes and Screwed Fittings Where Pressure-Tight Joints are made on the threads(B2.1&JIS B0203 PT Thread).
* API 5B, Line Pipe Threads.
* KS B0222 Taper Pipe Threads.

3. Bore Diameter of Fittings

Bore diameter of fitting(M) are manufactured for conforming with JIS. ANSI. MSS. BONNEY. IHARA ....dimension.

Forged Steel Socket Welding Fitting

90° Elbow, 45° Elbow, Tee, Cross, Coupling
3000# / 6000# / 9000#

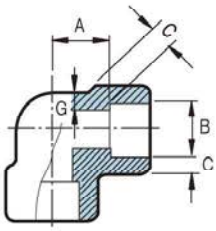

90° Elbow

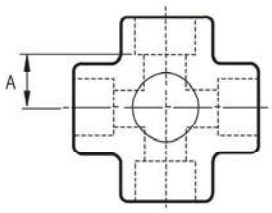

Cross

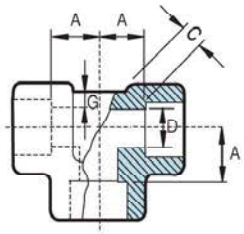

Tee

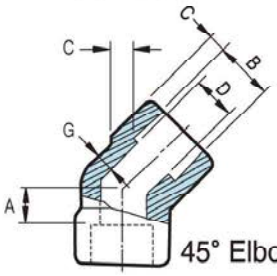

45° Elbow

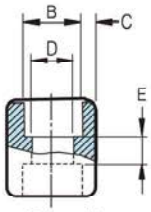

Coupling

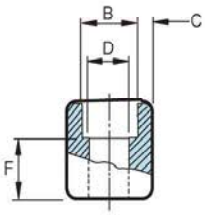

Half Coupling

ASME B16.11

Unit : mm

Nom. Pipe Size (in.)	Socket Bore Dia B	Bore Diameter of Fitting D			Scocket Wall Thickness-C						Body Wall Thickness-G		
					Pressure Class Designation						Pressure Class Designation		
		Pressure Class Designation			3000		6000		9000		3000	6000	9000
		3000	6000	9000	Ave.	Min.	Ave.	Min.	Ave.	Min.	Min.	Min.	Min.
1/8	11.2 10.8	7.6 6.1	4.8 3.2		3.18	3.18	3.96	3.43			2.41	3.15	
1/4	14.6 14.2	10.0 8.5	7.1 5.6		3.78	3.30	4.60	4.01			3.02	3.68	
3/8	18.0 17.6	13.3 11.8	9.9 8.4		4.01	3.50	5.03	4.37			3.20	4.01	
1/2	22.2 21.8	16.6 15.0	12.5 11.0	7.2 5.6	4.67	4.09	5.97	5.18	9.35	8.18	3.73	4.78	7.47
3/4	27.6 27.2	21.7 20.2	16.3 14.8	11.8 10.3	4.90	4.27	6.96	6.04	9.78	8.56	3.91	5.56	7.82
1	34.3 33.9	27.4 25.9	21.5 19.9	16.0 14.5	5.69	4.98	7.92	6.93	11.38	9.96	4.55	6.35	9.09
1 1/4	43.1 42.7	35.8 34.3	30.2 28.7	23.5 22.0	6.07	5.28	7.92	6.93	12.14	10.62	4.85	6.35	9.70
1 1/2	49.2 48.8	41.7 40.1	34.7 33.2	28.7 27.2	6.35	5.54	8.92	7.80	12.70	11.12	5.08	7.14	10.15
2	61.7 61.2	53.5 51.7	43.6 42.1	38.9 37.4	6.93	6.04	10.92	9.50	13.84	12.12	5.54	8.74	11.07
2 1/2	74.4 73.9	64.2 61.2			8.76	7.67					7.01		
3	90.3 89.8	79.5 76.4			9.52	8.30					7.62		
4	115.7 115.2	103.8 100.7			10.69	9.35					8.56		

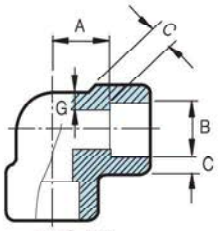

90° Elbow

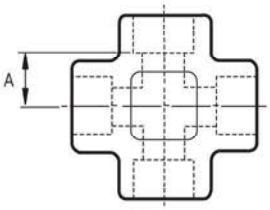

Cross

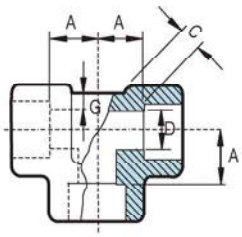

Tee

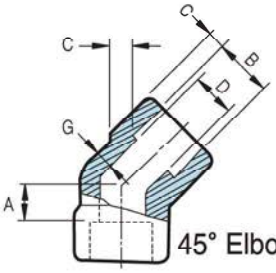

45° Elbow

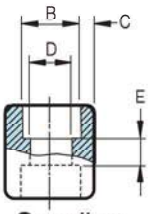

Coupling

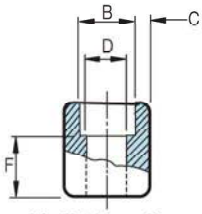

Half Coupling

ASME B16.11

Unit : mm

Nom. Pipe Size (in.)	Depth of Socket Min.-J	Center To Bottom of Socket-A						Laying Lengths	
		90° Elbows, Tees, and Crosses			45° Elbows			Couplings E	Half Couplings E
		Pressure Class Designation			Pressure Class Designation				
		3000	6000	9000	3000	6000	9000		
1/8	9.5	12 10	12 10		9 7	9 7		8 5	17 15
1/4	9.5	12 10	14.5 12.5		9 7	9 7		8 5	17 15
3/8	9.5	15 12	17 14		9.5 6.5	12.5 9.5		9.5 3.5	19 16
1/2	9.5	17 14	20.5 17.5	27 24	12.5 9.5	14 11	17 14	12.5 6.5	24 21
3/4	12.5	21 18	24 21	30 27	14.5 11.5	15.5 12.5	20.5 17.5	12.5 6.5	25.5 22.5
1	12.5	24.5 20.5	29 25	34 30	16 12	19.5 15.5	22.5 18.5	16.5 8.5	30.5 26.5
1 1/4	12.5	29 25	34 30	37 33	19.5 15.5	22.5 18.5	24.5 20.5	16.5 8.5	32 28
1 1/2	12.5	34 30	40 36	40 36	22.5 18.5	27.5 23.5	27.5 23.5	16.5 8.5	34 30
2	16	40 36	43 39	56 52	27.5 23.5	30.5 26.5	30.5 26.5	23 15	43 39
2 1/2	16	43.5 38.5			31 26			24 14	45.5 40.5
3	16	59.5 54.5			34.5 29.5			24 14	47 42
4	19	69 64			43.5 38.5			24 14	50.5 45.5

Forged Steel Socket Welding Fitting

Union 3000#

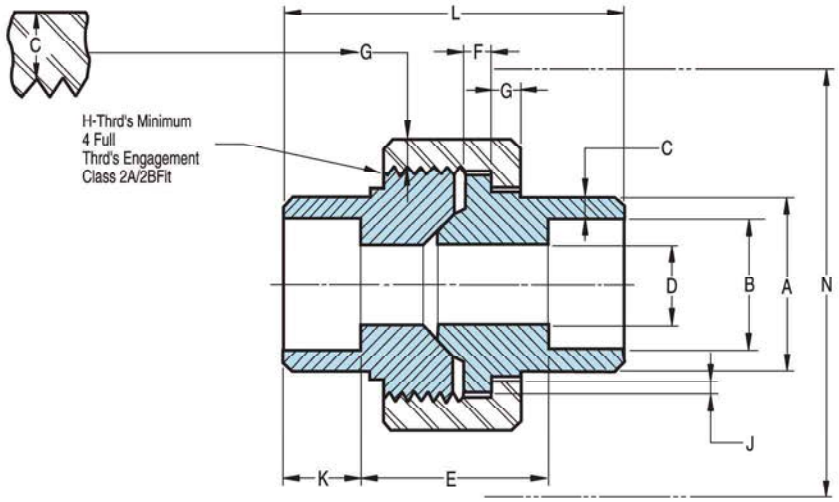

MSS SP-83 & Maker Standard

Unit : mm

Nom. Pipe Size (in.)	Pipe End Min.	Socket Bore Dia.	Socket Wall Min.	Water Way Bore	Laying Length	Male Flange Min.	Nut Min.	Thrds. per 25.4 Max.	Bearing Min.	Depth of Socket Min.	Length Assem Nominal	Clear Assem. Nut
	A	B	C	D	E	F	G	H	J	K	L	N
1/8	21.8	10.92 10.67	3.17	6.83 6.43	22.4 19.0	3.17	3.17	16	1.24	9.6	41.1	49.0
1/4	21.8	14.22 13.97	3.30	9.85 9.45	22.4 19.0	3.17	3.17	16	1.24	9.6	41.4	49.0
3/8	25.9	17.78 17.53	3.48	13.92 13.51	26.9 20.6	3.43	3.43	14	1.37	9.6	46.0	55.0
1/2	31.2	21.84 21.59	4.06	17.47 17.07	26.9 20.6	3.68	3.68	14	1.50	9.6	49.0	47.0
3/4	37.1	27.18 26.92	4.27	21.79 21.39	31.8 25.4	4.06	4.06	11	1.68	12.7	56.9	67.0
1	45.5	34.04 33.78	4.95	28.14 27.74	34.3 26.2	4.57	4.44	11	1.85	12.7	62.0	79.0
1 1/4	54.9	42.67 42.42	5.28	35.76 35.36	40.6 32.5	5.33	5.21	11	2.13	12.7	71.1	94.0
1 1/2	61.5	48.77 48.51	5.54	41.61 41.20	42.2 34.0	5.84	5.59	10	2.31	12.7	76.5	111.0
2	75.2	61.47 61.21	6.05	52.53 52.12	45.5 37.3	6.60	6.35	10	2.69	15.8	86.1	132.0
2 1/2	91.7	74.17 73.66	7.65	64.72 64.31	61.7 52.1	7.49	7.11	8	3.07	15.8	102.4	148.0
3	109.2	90.17 89.66	8.31	77.67 77.27	63.8 53.6	8.25	8.00	8	3.53	15.8	109.0	175.0

Cap 3000# / 6000#

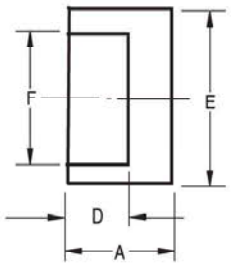

ASME B16.11

Unit : mm

Nom. Pipe Size (in)	A		E		F		D		Unit weight (kg)	
	3000	6000	3000	6000	3000	6000	3000	6000	3000	6000
1/4	16	18	22	23	14.3	14.3	9.5	9.5	0.04	0.04
3/8	16	18	25.5	26.5	17.8	17.8	9.5	9.5	0.05	0.06
1/2	17.5	25.5	31.5	34	22.2	22.2	9.5	9.5	0.07	0.15
3/4	22.5	32	37	41	27.7	27.7	13	13	0.13	0.27
1	29	35.5	45.5	50	34.5	34.5	13	13	0.21	0.45
1 1/4	29	39	55	58.5	43.2	43.2	13	13	0.37	0.67
1 1/2	32	40	61.5	66.5	49.1	49.1	13	13	0.60	0.89
2	42	50	75	83	61.1	61.1	16	16	0.99	1.75
2 1/2	42	55	91.5	98	77.1	77.1	16	16	1.50	2.66
3	42	60	109	118	90.1	90.1	16	16	2.30	4.33
4	50	70	138	149	115.3	115.3	20	20	4.00	7.91

ANSI FORGED STEEL SOCKET WELDING FITTING

Boss 3000# / 6000# / 9000#

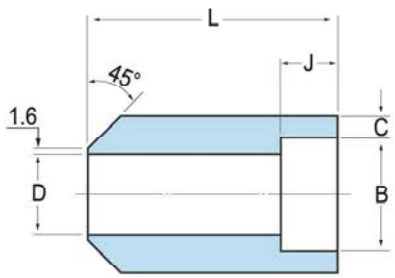

Type. 1

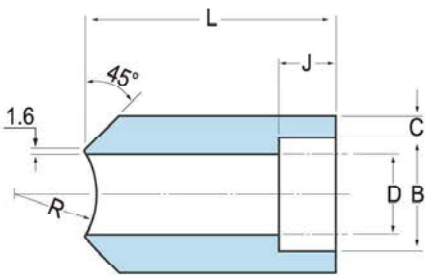

Type. 2

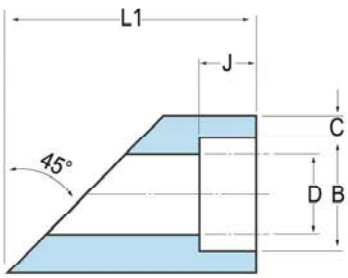

Type. 3

Unit : mm

Nom. Pipe Size (in)	Socket Bore Dia B	Bore Diameter of Fitting-D			Socket Wall Thickness min-C			Depth Min J	End to End	
		3000	6000	9000	3000	6000	9000		L	L_1
1/4	14.10~14.35	8.5~10.0	5.6~7.1	–	3.30	4.00	–	10	30	62
3/8	17.55~17.80	11.8~13.3	8.4~9.9	–	3.50	4.35	–	10	30	66
1/2	21.70~21.95	15.5~16.6	11.0~12.5	5.6~7.2	4.10	5.20	8.20	10	33	82
3/4	27.05~27.30	20.2~21.7	14.8~16.3	10.3~11.8	4.25	6.05	8.55	13	35	88
1	33.80~34.05	25.9~27.4	19.9~21.5	14.5~16.0	5.00	6.95	9.95	13	43	96
1 1/4	42.55~42.80	34.3~35.8	28.7~30.2	22.0~23.5	5.30	6.95	10.60	13	46	105
1 1/2	48.65~48.90	40.1~41.7	33.2~34.7	27.2~28.7	5.55	7.80	11.15	13	50	112
2	61.10~61.35	51.7~53.5	42.1~43.6	37.4~38.9	6.05	9.50	12.12	16	57	125

*"R" Dem ension shall be applied run pipe size

Forged Steel Socket Welding Fitting

Reducer Insert 3000# / 6000#

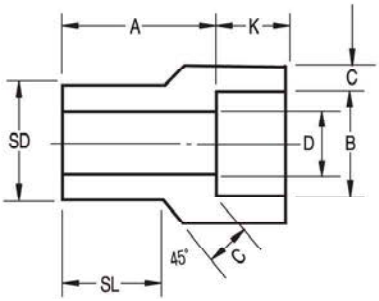

Type 1

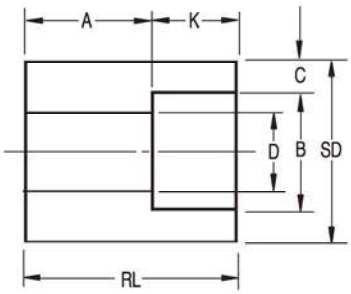

Type 2[1]

MSS SP-79

Unit : mm

Nom. Pipe Size (in.)	Type		Socket		Shank Dia SD	Laying Length A		Bore D		Wall Min. C		Length Min.			
			Dia. B	Depth Min. K								SL		RL	
	3M	6M				3M	6M	3M	6M	3M	6M	3M	6M	3M	6M
3/8 x 1/4	1	1	14.22	9.52	17.14	19.0	20.6	9.14	6.35	3.78	4.60	14.22	15.75		
1/2 x 3/8	1	1	17.65	9.52	21.34	20.6	22.2	12.45	9.14	4.01	5.03	15.75	17.27		
x 1/4	2	1	14.22	9.52	21.34	15.8	20.6	9.14	6.35	3.78	4.60	17.27	17.27		
3/4 x 1/2	1	1	21.84	9.52	26.67	22.2	25.4	15.75	11.68	4.67	5.97	17.53	19.05		
x 3/8	2	1	17.65	9.52	26.67	15.8	22.2	12.45	9.14	4.01	5.03		19.05	26.92	
x 1/4	2	2	14.22	9.52	26.67	17.5	22.2	9.14	6.35	3.78	4.60			26.92	29.97
1 x 3/4	1	1	27.18	12.70	33.35	23.8	28.5	20.83	15.49	4.90	6.96	19.05	20.57		
x 1/2	2	2	21.84	9.52	33.35	15.8	20.6	15.75	11.68	4.67	5.97		20.57	28.45	
x 3/8	2	2	17.65	9.52	33.35	17.5	22.2	12.45	9.14	4.01	5.03			28.45	33.27
x 1/4	2	2	14.22	9.52	33.35	19.0	23.8	9.14	6.35	3.78	4.60			28.45	33.27
1 1/4 x 1	1	1	33.86	12.70	42.16	25.4	30.2	26.67	20.57	5.69	4.92	7.92	22.35		
x 3/4	2	2	27.17	12.70	42.16	17.5	20.6	20.88	15.49	4.90	6.96	6.96		31.75	34.80
x 1/2	2	2	21.84	9.52	42.16	19.0	22.2	15.75	11.68	4.67	5.97	5.97		31.75	34.80
x 3/8	2	2	17.65	9.52	42.16	20.6	23.8	12.45	9.14	4.01	5.03	5.03		31.75	34.80
x 1/4	2	2	14.22	9.52	42.16	22.2	25.4	9.14	6.35	3.78	4.60	4.60		31.75	34.80
1 1/2 x 1 1/4	1	1	41.67	12.70	48.26	28.5	35.1	35.05	29.46	6.07	7.92	7.92	25.40		
x 1	2	1	33.86	12.70	48.26	17.5	28.5	26.67	20.57	5.69	7.92	7.92	25.40	33.27	
x 3/4	2	2	27.18	12.70	48.26	19.0	25.4	20.83	15.49	4.90	6.96	6.96		33.27	39.62
x 1/2	2	2	21.84	9.52	48.26	20.6	26.9	15.75	11.68	4.67	5.97	5.97		33.27	39.62
x 3/8	2	2	17.65	9.52	48.26	22.2	28.5	12.45	9.14	4.01	5.03	5.03		33.27	39.62
2 x 1 1/2	1	1	48.77	12.70	60.32	31.7	46.0	40.89	34.04	6.35	8.91	8.91	39.62		
x 1 1/4	2	2	42.67	12.70	60.32	20.6	23.8	34.92	29.46	6.07	7.92	7.92		38.10	45.97
x 1	2	2	33.91	12.70	60.32	22.2	25.4	26.67	20.83	5.69	7.92	7.92		38.10	45.97
x 3/4	2	2	27.18	12.70	60.32	23.8	26.9	20.83	15.49	4.90	6.96	6.96		38.10	45.97
x 1/2	2	2	21.84	9.52	60.32	25.4	28.5	15.87	11.68	4.67	5.97	5.97		38.10	45.97

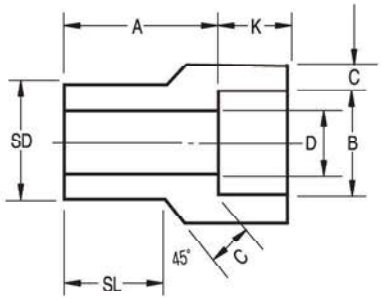

Type 1

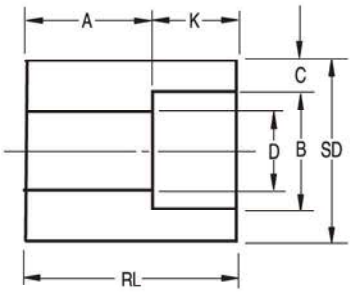

Type 2[1]

MSS SP-79

Unit : mm

Nom. Pipe Size (in.)	Type		Socket		Shank Dia SD	Laying Length A		Bore D		Wall Min. C		Length Min.			
			Dia. B	Depth Min. K								SL		RL	
	3M	6M				3M	6M	3M	6M	3M	6M	3M	6M	3M	6M
2 1/2 x 2	1	1	61.24	15.87	73.02	46.0	42.8	52.58	42.92	6.93	10.92	38.10	31.75		
x 1 1/2	2	2	48.77	12.70	73.02	34.9	X	40.89	X	6.35	X			53.85	X
x 1 1/4	2	2	42.67	12.70	73.02	36.5	X	34.92	X	6.07	X			53.85	X
x 1	2	2	33.91	12.70	73.02	38.1	X	26.67	X	5.69	X			53.85	X
x 3/4	2	2	27.18	12.70	73.02	39.6	X	20.83	X	4.90	X			53.85	X
3 x 2 1/2	1	X	74.01	15.87	88.90	38.1	X	62.74	X	8.76	X	31.75	X		
x 2	2	X	61.24	15.87	88.90	25.4	X	52.58	X	6.93	X			47.50	X
x 1 1/2	2	X	48.7742.	12.70	88.90	28.5	X	40.89	X	6.35	X			47.50	X
x 1 1/4	2	X	67	12.70	88.90	30.1	X	34.92	X	6.07	X			47.50	X
x 1	2	X	33.91	12.70	88.90	31.7	X	26.67	X	5069	X			47.50	X
4 x 3	2	X	89.99	15.87	114.30	33.2	X	77.99	X	9.52	X			60.32	X
x 2 1/2	2	X	74.01	15.87	114.30	38.1	X	62.74	X	8.76	X			60.32	X
x 2	2	X	61.24	15.87	114.30	38.1	X	52.58	X	6.93	X			60.32	X
x 1 1/2	2	X	48.77	12.70	114.30	41.2	X	40.89	X	6.35	X			60.32	X
x 1 1/4	2	X	42.67	12.70	114.30	42.8	X	34.92	X	6.07	X			60.32	X

(1) At the option of the manufacturer type 2 Reducers may be furnished in Type 1 configuration
(2) 3M and 6M symbols denote 3000 and 6000 classes.

Tolerances

Laying Lenght A - Sizes "thru" +or-1.52mm
Sizes1 "thru2" +or-2.03 mm
Sizes2 "thru4" +or-2.54 mm

Socket Dia. B - Sizes "thru2" +or-0.13 mm
Sizes2 "thru4" +or-0.20 mm

Bore D - "thru2" +or-0.76 mm
Sizes2 "thru4" +or-1.52 mm

Socket Dia. SD - Sizes "thru1" +or-0.25 mm
Sizes2 "thru3" +or-0.51 mm
Sizes4 +or-0.76 mm

Forged Steel Threaded Fitting

90° Elbow, 45° Elbow, Tee 2000# / 3000# / 6000#

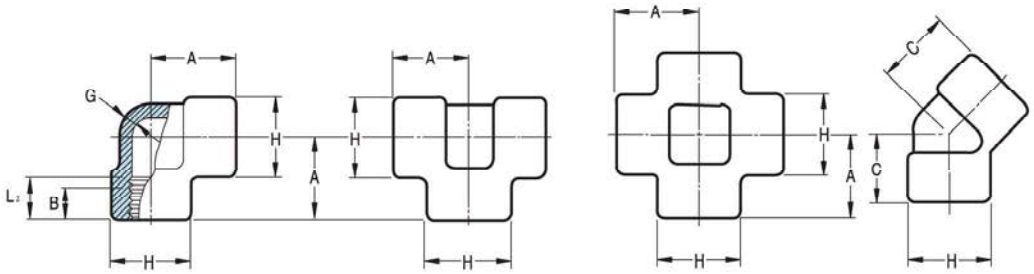

ASME B16. 11

Unit : mm

Nom. Pipe Size (in.)	Center to End Elbows Tee Crosses A			Center to End 45°Elbows A			Outside Diameter of Band H			Minimum Wall Thickness			Length of Thread. Min	
	2000	3000	6000	2000	3000	6000	2000	3000	6000	2000	3000	6000	B	L_2
1/8	21	21	25	17	17	19	22	22	25	3.18	3.18	6.35	6.4	6.7
1/4	21	25	28	17	19	22	22	25	33	3.18	3.30	6.60	8.1	10.2
3/8	25	28	33	19	22	25	25	33	38	3.18	3.51	6.98	9.1	10.4
1/2	28	33	38	22	25	28	33	38	46	3.18	4.09	8.15	10.9	13.6
3/4	33	38	44	25	28	33	38	46	56	3.18	4.32	8.53	12.7	13.9
1	38	44	51	28	33	35	46	56	62	3.68	4.98	9.93	14.7	17.3
1 1/4	44	51	60	33	35	43	56	62	75	3.89	5.28	10.59	17.0	18.0
1 1/2	51	60	64	35	43	44	62	75	84	4.01	5.56	11.07	17.8	18.4
2	60	64	83	43	44	52	75	84	102	4.27	7.14	12.09	19.0	19.2
2 1/2	76	83	95	52	52	64	92	102	121	5.61	7.65	15.29	23.6	28.9
3	86	95	106	64	64	79	109	121	146	5.99	8.84	16.64	25.9	30.5
4	106	114	114	79	79	79	146	152	152	6.55	11.18	18.67	27.7	33.0

Coupling, Half Coupling, Cap 3000# / 6000#

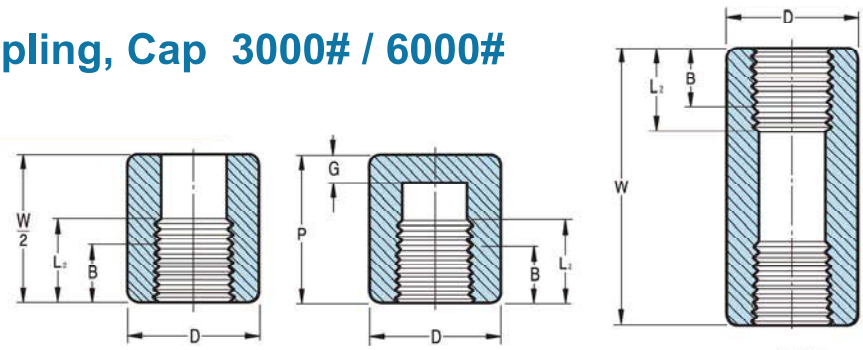

ASME B16. 11

Unit : mm

Nom. Pipe Size (in.)	End to End Couplings W	End to End Caps P		Outside Diameter D		End Wall Thickness G Min.		Length of Thread, Min	
	3000 & 6000	3000	6000	3000	6000	3000	6000	B	L_2
1/8	32	19		16	22	4.8		6.4	6.7
1/4	35	25	27	19	25	4.8	6.4	8.1	10.2
3/8	38	25	27	22	32	4.8	6.4	9.1	10.4
1/2	48	32	33	28	38	6.4	7.9	10.9	13.6
3/4	51	37	38	35	44	6.4	7.9	12.7	13.9
1	60	41	43	44	57	9.7	11.2	14.7	17.3
1 1/4	67	44	46	57	64	9.7	11.2	17.0	18.0
1 1/2	79	44	48	64	76	11.2	12.7	17.8	18.4
2	86	48	51	76	92	12.7	15.7	19.0	19.2
2 1/2	92	60	64	92	108	15.7	19.0	23.6	28.9
3	108	65	68	108	127	19.0	22.4	25.9	30.5
4	121	68	75	140	159	22.4	28.4	27.7	33.0

Concentric Reducer, Eccentric Reducer 3000# / 6000#

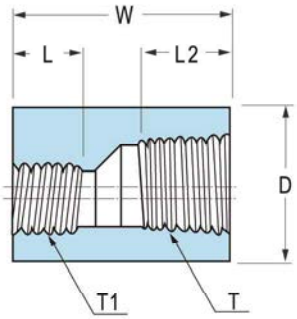

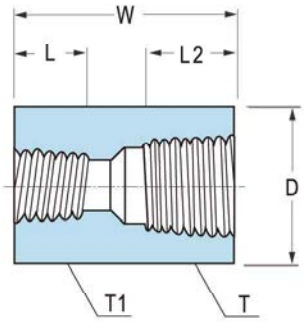

ANSI B16.11

Unit : mm

Nom. Pipe Size (in)	Outside Diameter-D		End to End W	Length of Thread(Min)	
T x T1	3000	6000		L2	L
1/4 x 1/8	19	25	35	8.0	6.5
3/8 x 1/4	22	32	38	9.0	8.0
1/2 x 1/4	29	38	48	11.0	8.0
x 3/8	29	38	48	11.0	9.0
3/4 x 1/4	35	44	51	12.5	8.0
x 3/8	35	44	51	12.5	9.0
x 1/2	35	44	51	12.5	11.0
1 x 3/8	44	57	60	14.5	9.0
x 1/2	44	57	60	14.5	11.0
x 3/4	44	57	60	14.5	12.5
1 1/4 x 1/2	57	64	67	17.0	11.0
x 3/4	57	64	67	17.0	12.5
x 1	57	64	67	17.0	14.5
1 1/2 x 3/4	64	76	79	18.0	12.5

Nom. Pipe Size (in)	Outside Diameter-D		End to End W	Length of Thread(Min)	
T x T1	3000	6000		L2	L
1 1/2 x 1	64	76	79	18.0	14.5
x 1 1/4	64	76	79	18.0	17.0
2 x 1	76	92	86	19.0	14.5
x 1 1/4	76	92	86	19.0	17.0
x 1 1/2	76	92	86	19.0	18.0
2 1/2 x 1 1/4	92	108	92	23.5	17.0
x 1 1/2	92	108	92	23.5	18.0
x 2	92	108	92	23.5	19.0
3 x 1 1/2	108	127	108	26.0	18.0
x 2	108	127	108	26.0	19.0
x 2 1/2	108	127	108	26.0	23.5
4 x 2	140	159	121	27.5	19.0
x 2 1/2	140	159	121	27.5	23.5
x 3	140	159	121	27.5	26.0

Boss 3000# / 6000#

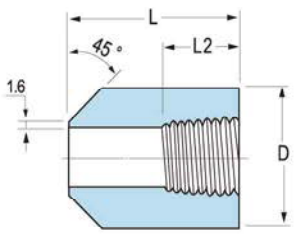

Type 1

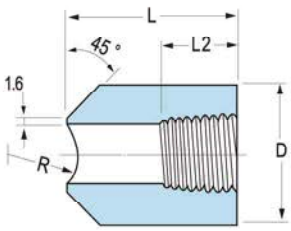

Type 2

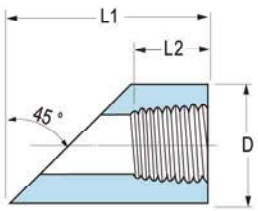

Type 3

Maker Standard

Unit : mm

Nom. Pipe Size (in)		Outside Diameter-D		End to End		Round-R	Length of Thread L2 Min
B	A	3000	6000	L	L1		
1/4	8	19	25	40	62	25	8.0
3/8	10	22	32	45	66	30	9.0
1/2	15	29	38	50	82	30	11.0
3/4	20	35	44	50	88	30	12.5
1	25	44	57	50	96	40	14.5
1 1/4	32	57	64	50	105	45	17.0
1 1/2	40	64	76	50	112	55	18.0
2	50	76	92	50	125	55	19.0

Forged Steel Threaded Fitting

Plug, Bushing

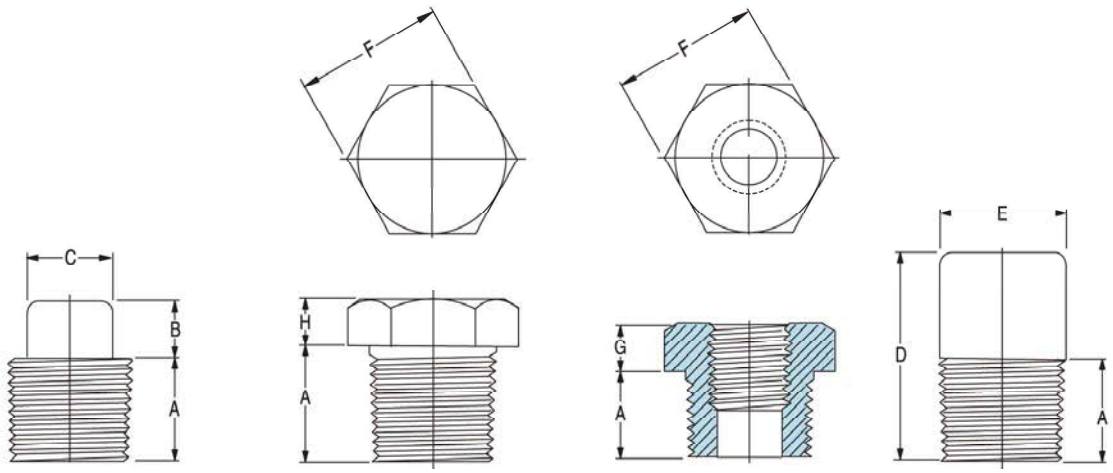

Spuare Head Plug | Hex Head Plug | Hex Head Bushing | Round Head Plug

ASME B16. 11

Unit : mm

Nom. Pipe Size (in)	Length (Munimum) A	Plugs Square Head		Plugs Round Head		Hex Plugs & Bushings		
		Height of Square (Minimum) B	Width Flats (Minimum) C	Nominal Diameter of Head E	Length (Minimum) D	Width Flats (Nominal) F	Hex Height Min. Bushing G	Hex Height Min. Plug H
1/8	10	6	7	10	35	11		6
1/4	11	6	10	14	41	16	3	6
3/8	13	8	11	18	41	18	4	8
1/2	14	10	14	21	44	22	5	8
3/4	16	11	16	27	44	27	6	10
1	19	13	21	33	51	36	6	10
1 1/4	21	14	24	43	51	46	7	14
1 1/2	21	16	28	48	51	50	8	16
2	22	18	32	60	64	65	9	18
2 1/2	27	19	36	73	70	75	10	19
3	28	21	41	89	70	90	10	21
4	32	25	65	114	76	115	13	25

Union 3000#

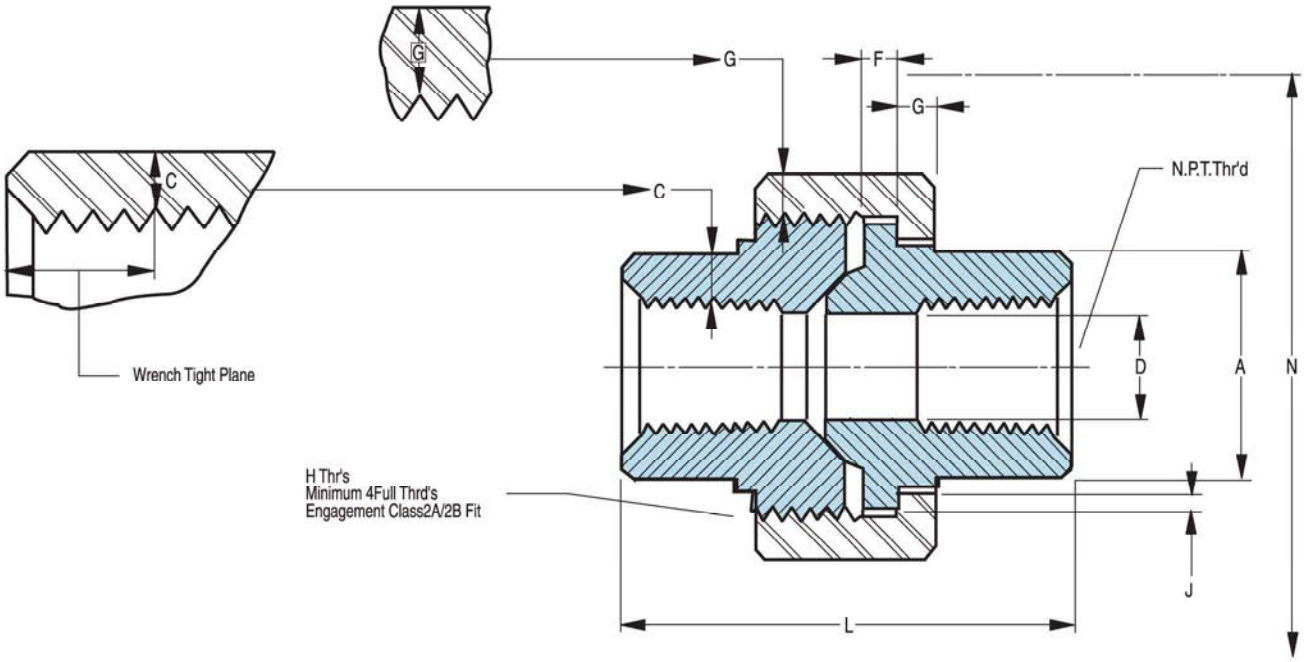

MSS SP-83 & Maker Standard

Unit : mm

Nom. Pipe Size (in.)	Pipe End Min. A	Wall Min. C	Water Way Bore D	Male Flange Min. F	Nut Min. G	Thrds. Per 25.4 Max. H	Bearing. Min J	Length Assem. Nominal L	Clear Assem. Nut N
1/8	21.8	3.18	6.83 6.43	3.17	3.2	16	1.24	41.4	49.0
1/4	21.8	3.30	9.85 9.45	3.17	3.2	16	1.24	41.4	49.0
3/8	25.9	3.50	13.92 13.51	3.43	3.4	14	1.37	46.0	55.0
1/2	31.2	4.09	17.47 17.07	3.68	3.7	14	1.50	49.0	57.0
3/4	37.1	4.27	21.79 21.39	4.06	4.1	11	1.68	56.9	67.0
1	45.4	4.99	28.14 27.74	4.57	4.4	11	1.85	62.0	79.0
1 1/4	54.9	5.28	35.76 35.36	5.33	5.2	11	2.13	71.1	94.0
1 1/2	61.5	5.54	41.61 41.20	5.84	5.6	10	2.31	76.4	111.0
2	75.2	6.05	52.53 52.12	6.60	6.4	10	2.69	86.1	132.0
2 1/2	91.7	7.68	64.72 64.31	7.49	7.1	8	3.07	102.4	148.0
3	109.2	8.31	77.67 77.27	8.25	8.0	8	3.53	109.0	175.0

Forged Steel Threaded Fitting

Hex Nipple 3000# / 6000#

Unit : mm

Nom Pipe T x T_1 (in)	d	H	L	L_1	L_2	Unit Weight (kg)
3/8 x 1/4	7.1	19	14	8	14	0.05
1/2 x 1/4	7.1	24	19	9	14	0.09
1/2 x 3/8	8.9	24	19	9	14	0.09
3/4 x 1/4	7.1	30	19	10	14	0.15
3/4 x 3/8	8.9	30	19	10	14	0.15
3/4 x 1/2	11.9	30	19	10	19	0.15
1 x 3/8	8.9	36	24	11	14	0.27
1 x 1/2	11.9	36	24	11	19	0.27
1 x 3/4	16.0	36	24	11	19	0.27
1 1/4 x 1/2	11.9	46	24	12	19	0.45
1 1/4 x 3/4	16.0	46	24	12	19	0.45
1 1/4 x 1	20.1	46	24	12	24	0.45
1 1/2 x 3/4	16.0	50	25	14	19	0.62
1 1/2 x 1	20.1	50	25	14	24	0.62
1 1/2 x 1 1/4	27.9	50	25	14	24	0.62
2 x 1	20.1	65	26	16	24	1.03
2 x 1 1/4	27.9	65	26	16	24	1.03
2 x 1 1/2	32.0	65	26	16	25	1.03
2 1/2 x 1 1/4	27.9	80	38	18	24	1.51
2 1/2 x 1 1/2	32.0	80	38	18	25	1.51
2 1/2 x 2	39.9	80	38	18	26	1.51
3 x 1 1/2	32.0	95	40	20	25	2.22
3 x 2	39.9	95	40	20	26	2.22
3 x 2 1/2	55.1	95	40	20	38	2.22

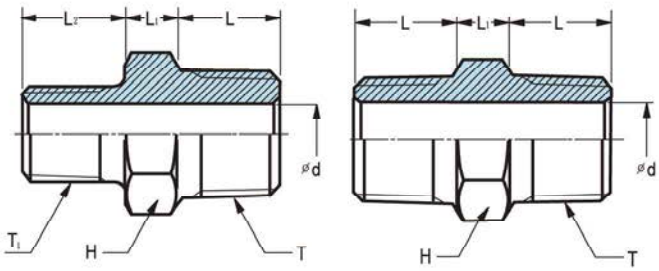

Nom Pipe T (in)	d	H	L	L_1	Unit Weight (kg)
1/8	4.1	12	10	6	0.03
1/4	7.1	17	14	8	0.04
3/8	8.9	19	14	8	0.05
1/2	11.9	24	19	9	0.09
3/4	16.0	30	19	10	0.15
1	20.1	36	24	11	0.27
1 1/4	27.9	46	24	12	0.45
1 1/2	32.0	50	25	14	0.62
2	39.9	65	26	16	1.03
2 1/2	55.1	80	38	18	1.51
3	65.0	95	40	20	2.22

Swaged Nipple

MSS SP-75

Large end Size (in)	Small end Size	Length (mm)
1/2	3/8 – 1/8	70
3/4	1/2 – 1/8	76
1	3/4 – 1/8	89
1 1/4	1 – 1/8	102
1 1/2	1 1/4 – 1/8	114
2	1 1/2 – 1/8	165
2 1/2	2 – 1/8	178
3	2 1/2 – 1/8	203
3 1/2	3 – 1/8	203
4	3 1/2 – 1/8	229

TBE	Threaded Both End
PBE	Plain Both End
PLE/TSE	Plain Large End/Threaded Small End
BLE/TSE	Beveled Large End/Threaded Small End
BLE/PSE	Beveled Large End/Plain Small End
TLE/PSE	Threaded Large End/Plain Small End

SHAPE

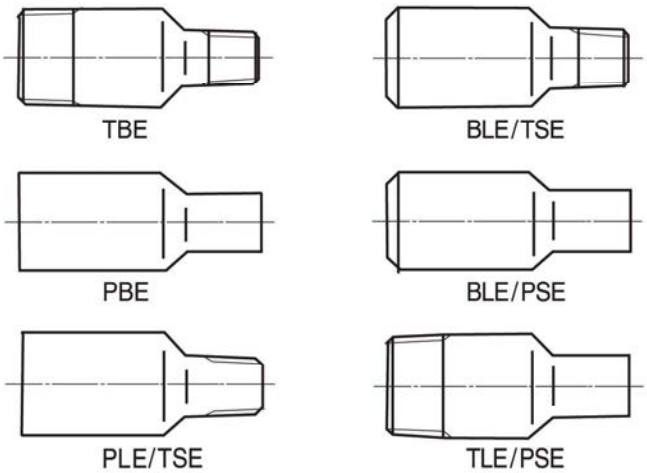

Forged Steel Outlet Fitting

Weld-Outlets STD(Sch 40) / XS(Sch 80)

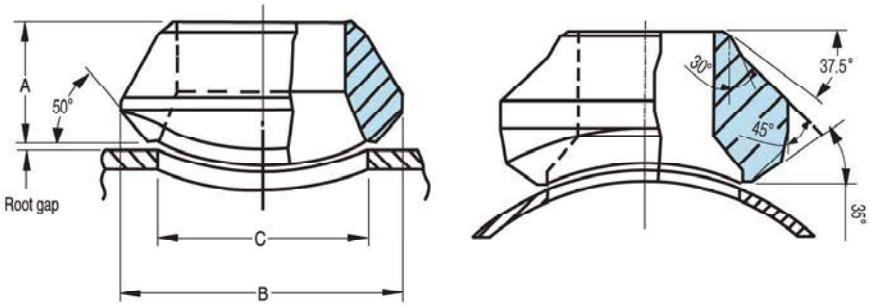

MSS SP-97 & Maker Standard

Outlet Size(in.)	A		B		C		APP' Weight(kg)	
	STD	XS	STD	XS	STD	XS	STD	XS
1/2	19.1	19.1	34.9	34.9	23.8	23.8	0.08	0.09
3/4	22.2	22.2	44.5	44.5	30.2	30.2	0.11	0.14
1	27.0	27.0	54.0	54.0	36.5	36.5	0.23	0.21
1 1/4	31.8	31.8	65.1	65.1	44.5	44.5	0.36	0.41
1 1/2	33.3	33.3	73.0	73.0	50.8	50.8	0.45	0.5
2	38.1	38.1	88.9	88.9	65.1	65.1	0.80	0.80
2 1/2	41.3	41.3	103.2	103.2	76.2	76.2	1.14	1.2
3	44.5	44.5	122.2	122.2	93.7	93.7	1.82	1.9
4	50.8	50.8	152.4	152.4	120.7	120.7	2.86	2.9
5	57.2	57.2	179.4	179.4	141.3	141.3	4.66	4.7
6	60.3	77.8	215.9	225.4	169.9	169.9	6.45	10.5
8	69.9	98.5	263.5	292.1	220.7	220.7	10.68	16.8
10	77.8	93.7	322.3	323.9	274.7	265.1	17.73	20.9
12	85.7	103.2	377.8	379.4	325.4	317.5	26.82	27.7
14	88.9	100.0	409.6	431.8	357.2	350.8	30.0	31.8
16	93.7	106.4	463.6	466.7	408.0	403.2	34.1	46.4
18	96.8	111.1	520.7	523.9	458.8	455.6	44.1	59.1
20	101.6	119.1	571.5	582.6	508.0	509.6	53.6	71.8
24	115.6	139.7	689.0	708.0	614.4	638.2	100.0	131.8
26	119.1	146.1	738.2	765.2	666.8	692.2	120.5	159.1

- Applicable Run Pipe Sizes Are From Out-Let Size to 36"
- The Weight of Standard Weight Fittings Are Same as Schedule 40 Upto 10" And Extra Strong Fittings Are Same as Schedule 80 Upto 8"
- Pipe Schedule Numbers and Weight Designations are in Accordance With ASME B36. 10M
- When Ordering Weld-outlets, Include the Quantity, Size(Run and out-Let), Description(Weld-outlets, Schedule Number) and Material

Weld-Outlets Sch160 / XXS

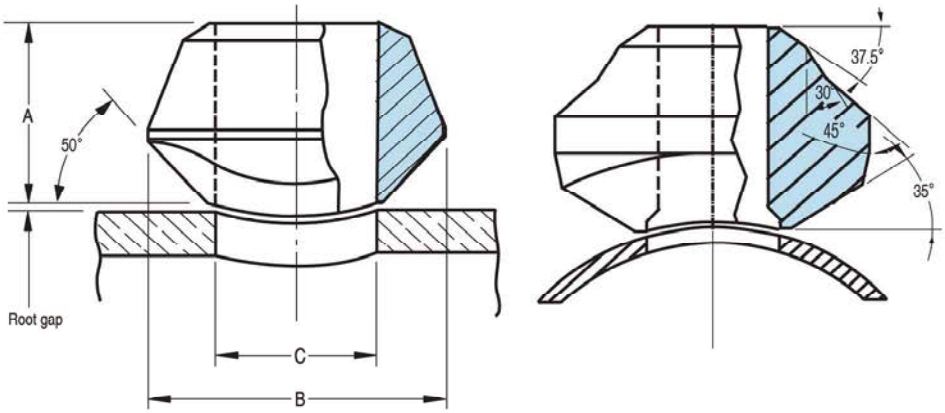

MSS SP-97 & Maker Standard

Outlet Size(in.)	A		B		C		APP' Weight(kg)	
	Sch160	XXS	Sch160	XXS	Sch160	XXS	Sch160	XXS
1/2	28.6	28.6	34.9	34.9	14.3	14.3	0.11	0.11
3/4	31.8	31.8	44.5	44.5	19.1	19.1	0.32	0.32
1	38.1	38.1	50.8	50.8	25.4	25.4	0.38	0.38
1 1/4	44.5	44.5	61.9	61.9	33.3	33.3	0.57	0.57
1 1/2	50.8	50.8	69.9	69.9	38.1	38.1	0.8	0.8
2	55.6	55.6	81.0	81.0	42.9	42.9	1.0	1.0
2 1/2	61.9	61.9	96.8	96.8	54.0	54.0	1.54	1.54
3	73.0	73.0	120.7	120.7	73.0	73.0	2.9	2.9
4	84.1	84.1	152.4	152.4	98.4	98.4	4.8	4.8
5	93.7	93.7	187.3	187.3	122.2	122.2	6.5	6.5
6	104.8	104.8	220.7	220.7	146.1	146.1	12.7	12.7
8	111.1	111.1	284.2	284.2	173.1	173.1	20.5	20.5
10	125.4	125.4	312.7	312.7	215.9	215.9	38.6	38.6

- Applicable Run Pipe Sizes are From Out-Let Size to 36"
- Pipe Schedule Numbers and Weight Designations are in Accordance With ASME B36. 10M
- When Ordering Weld outlets, Include the Quantity, Size(Run and out Let), Description(Weld outlets, Schedule Number) and Material

Forged Steel Outlet Fitting

Socket-Outlets 3000# / 6000#

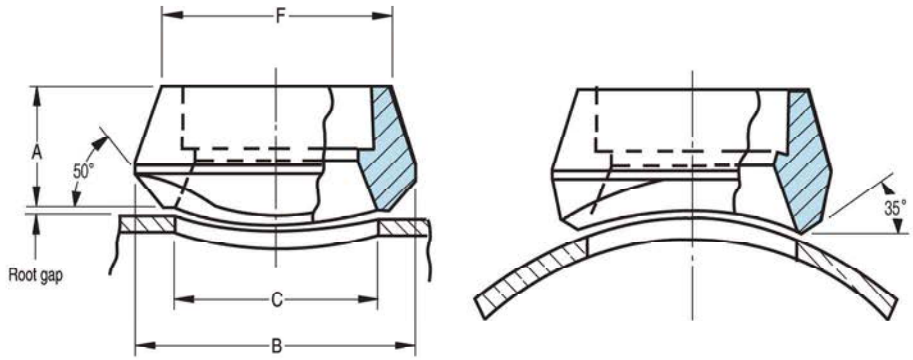

MSS SP-97 & Maker Standard

Outlet Size(in.)	A		B		C		F		APP' Weight(kg)	
	3000#	6000#	3000#	6000#	3000#	6000#	3000#	6000#	3000#	6000#
1/2	25.4	31.8	34.9	44.5	23.8	19.1	31.8	39.7	0.14	0.23
3/4	27.0	36.5	44.5	50.8	30.2	25.4	36.5	45.2	0.15	0.36
1	33.3	39.7	54.0	61.9	36.5	33.3	46.0	57.2	0.27	0.59
1 1/4	33.3	41.3	65.1	69.9	44.5	38.1	55.6	65.1	0.39	0.73
1 1/2	34.9	42.9	73.0	82.6	50.8	49.2	61.9	76.2	0.47	0.91
2	38.1	58.7	88.9	103.2	65.1	58.7	74.6	92.1	0.73	2.33
2 1/2	46.0	–	103.2	–	76.2	–	87.3	–	1.25	–
3	50.8	–	122.2	–	93.7	–	104.8	–	1.73	–
4	57.2	–	152.4	–	120.7	–	130.2	–	3.3	–

- Applicable Run Pipe Sizes are From Out-Let Size to 36"
- For the 3000# and 6000# Socket-outlets, Thredolets, Inside Bore, Thread, Socket Bore and Socket Depth Dimensions Are in Accordance With ASME B16.11
- Pipe Schedule Numbers and Weight Designations are in Accordance With ASME B36. 10M
- When Ordering Socket-outlets and Thredolets, Include the Quantity, Run and Outlet Size, Item and Rating(or Schedule Number) and Material

Thread-Outlets 3000# / 6000#

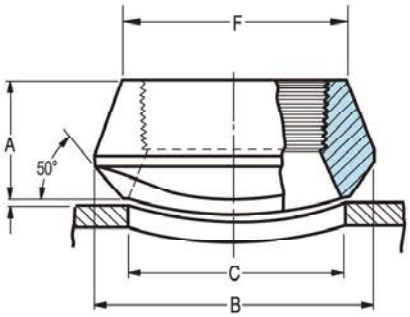

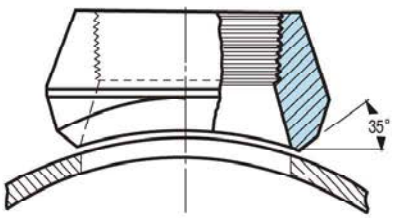

MSS SP-97 & Maker Standard

Outlet Size(in.)	A		B		C		F		APP' Weight(kg)	
	3000#	6000#	3000#	6000#	3000#	6000#	3000#	6000#	3000#	6000#
1/2	25.4	31.8	34.9	44.5	23.8	19.1	31.8	39.7	0.11	0.20
3/4	27.0	36.5	44.5	50.8	30.2	25.4	36.5	46.0	0.16	0.34
1	33.3	39.7	54.0	61.9	36.5	33.3	46.0	57.2	0.28	0.56
1 1/4	33.3	41.3	65.1	69.9	44.5	38.1	55.6	65.1	0.41	0.71
1 1/2	34.9	42.9	73.0	82.6	50.8	49.2	61.9	76.2	0.45	0.89
2	38.1	52.4	88.9	103.2	65.1	69.9	74.6	92.1	0.8	2.30
2 1/2	46.0	–	103.2	–	76.2	–	87.3	–	1.36	–
3	50.8	–	122.2	–	93.7	–	104.8	–	1.98	–
4	57.2	–	152.4	–	120.7	–	130.2	–	3.22	–

- Applicable Run Pipe Sizes are From Out-Let Size to 36"
- For the 3000# and 6000# Socket-outlets and Thredolets, Inside Bore, Thread, Socket Bore and Socket Depth Dimensions are According to ASME B16.11
- Pipe Schedule Numbers and Weight Designations are in Accordance With ASME B36. 10M
- When Ordering Socket-outlets and Thread-outlets, Include the Quantity, Run and Outlet Size, Item and Rating(or Schedule Number) and Material

Forged Steel Outlet Fitting

ELBOLET / LATROLET

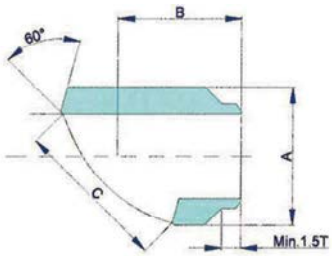

Butt welding end according to ASME B16.25

MSS SP-97 & Maker Standard

Dimensions in mm

OLETSIZE	RUN X OLET								
	A			B			C		
	3M		6M	3M		6M	3M		6M
	STD	XS	S160 / XXS	STD	XS	S160 / XXS	STD	XS	S160 / XXS
1/2	35.0	40.0	44.5	42.0	42.0	57.0	34.9	34.9	38.1
3/4	43.2	45.0	53.0	50.0	50.0	61.2	43.7	43.7	54.0
1	51.9	54.4	65.0	65.0	65.0	71.0	54.0	54.0	67.5
1 1/4	62.7	65.3	80.6	65.0	65.0	82.0	67.5	67.5	76.2
1 1/2	69.0	71.9	89.0	69.0	69.0	86.1	76.2	76.2	104.8
2	89.0	89.0	103.2	88.0	88.0	108.5	104.8	104.8	106.4
2 1/2	90.0	93.7	104.0	98.7	98.7	115.0	106.4	106.4	110.1
3	101.6	106.0	116.6	100.0	100.0	118.0	125.4	125.4	128.0
4	131.0	136.5	146.2	114.3	118.1	134.0	163.5	163.5	163.5
5	DWG	DWG	DWG	DWG	DWG	DWG	DWG	DWG	DWG
6	180.0	180.0	200.0	158.3	163.7	DWG	234.6	229.2	232.9
8	240.1	240.6	DWG	191.3	200.3	DWG	311.5	305.8	DWG
10	294.6	DWG	DWG	238.1	DWG	DWG	386.7	DWG	DWG
12	353.1	DWG	DWG	276.1	DWG	DWG	465.2	DWG	DWG
14	392.6	DWG		305.5	DWG		514.0	DWG	
16	450.0	DWG		345.0	DWG		590.5	DWG	
18	504.0	DWG		375.0	DWG		664.6	DWG	
20	550.0	DWG		414.8	DWG		733.7	DWG	
24	657.2	DWG		506.0	DWG		880.8	DWG	

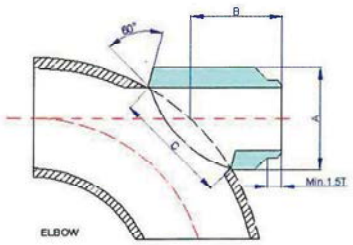

ELBOLET BW

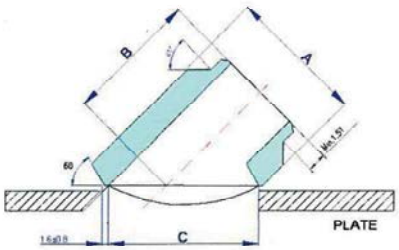

LATROLET BW

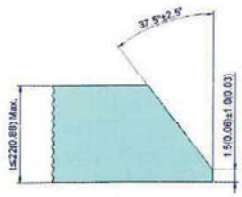

End Bevel

1. Applicable Run Pipe Sizes are From out -let Size to 36"
2. Pipe Schedule Number and Weight Designations are in Accordance With ASME B36.10
3. When Ordering Elbolet and Latrolet, Include the Quantity, Size(Run and Out -let), Description (Out -let, Schedule Number) and Mate rial.

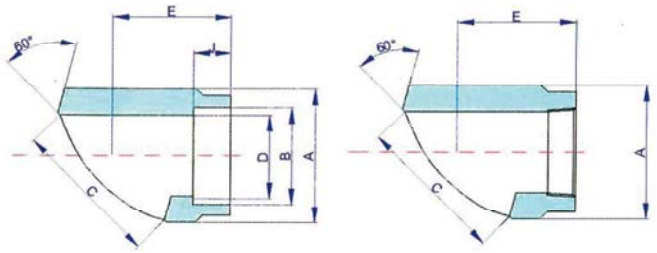

Thread according to ASME B1.20.1
Socket welding end according to ASME B16.11

ELBOLET / LATROLET

MSS SP-97 & Maker Standard

Dimensions in mm

OLETSIZE	RUN X OLET											
	A		B		C		D		E		J	
	3M	6M	3M	6M	3M	6M	3M	6M	3M	6M	3M	6M
1/2			21.7	21.7	38.1	43.7	15.7	11.7	40.5	47.0	10.0	10.0
3/4			27.1	27.1	43.7	54.0	20.8	15.5	48.0	56.0	13.0	13.0
1			33.9	33.9	54.0	67.5	26.7	20.6	55.6	64.3	13.0	13.0
1 1/4			42.6	42.6	67.5	76.2	35.1	29.4	62.0	68.3	13.0	13.0
1 1/2			48.7	48.7	76.2	104.8	40.9	34.6	66.7	81.6	13.0	13.0
2			61.1	61.1	104.8	106.4	52.5	42.9	81.0	92.1	16.0	16.0

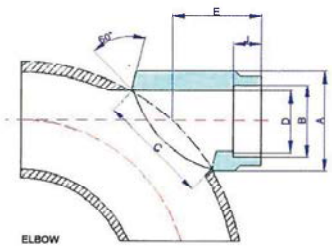

ELBOLET SW

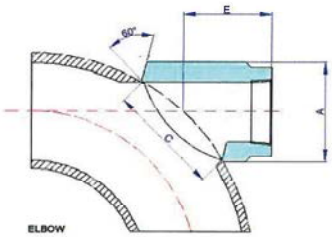

ELBOLET THR'D

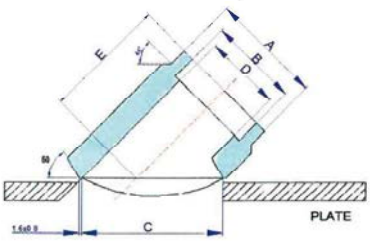

LATROLET SW

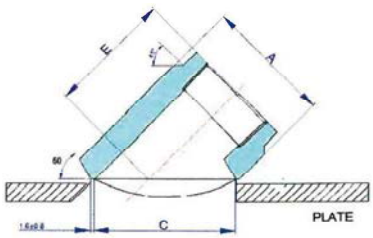

LATROLET THR'D

1. Applicable Run Pipe Sizes are From out -let Size to 36"
2. Pipe Schedule Number and Weight Designations are in Accordance With ASME B36.10
3. When Ordering Elbolet and Latrolet, Include the Quantity, Size(Run and Out -let), Description (Out -let, Schedule Number) and Mate rial.

Forged Steel Outlet Fitting

FLANGEOLET

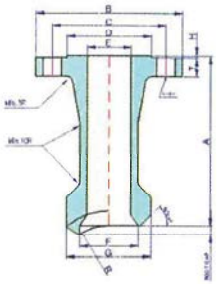

MSS SP-97 & ASME B16.5

Dimensions in mm

OLETSIZE	CL150													
	A	B	C	D	E				F		G		H	T
					S40	S80	S160	XXS	3M	6M	3M	6M		
1/2	150.0	90.0	60.3	35.1	15.7	13.9	11.7	6.3	23.8	14.3	34.9	34.9	2.0	9.6
3/4	150.0	100.0	69.9	42.9	20.9	18.9	15.5	11.1	30.2	19.1	44.5	44.5	2.0	11.2
1	150.0	110.0	79.4	50.8	26.6	24.4	20.6	15.2	36.5	25.4	54.0	50.8	2.0	12.7
1 1/4	150.0	115.0	88.9	63.5	35.0	32.4	29.4	22.8	44.5	33.3	65.1	61.9	2.0	14.3
1 1/2	150.0	125.0	98.4	73.2	40.9	38.1	34.1	27.9	50.8	38.1	73.0	69.9	2.0	15.9
2	150.0	150.0	120.7	91.9	52.5	49.3	42.9	38.1	65.1	42.9	88.9	81.0	2.0	17.5
2 1/2	150.0	180.0	139.7	104.6	62.6	59.0	54.0	45.0	76.2	54.0	103.2	96.8	2.0	20.7
3	150.0	190.0	152.4	127.0	77.9	73.7	66.7	58.5	93.7	73.0	122.2	120.7	2.0	22.3
4	150.0	230.0	190.5	157.2	102.3	97.1	87.3	80.1	120.7	98.4	152.4	152.4	2.0	22.3

OLETSIZE	CL300													
	A	B	C	D	E				F		G		H	T
					S40	S80	S160	XXS	3M	6M	3M	6M		
1/2	150.0	95.0	66.7	35.1	15.7	13.9	11.7	6.3	23.8	14.3	34.9	34.9	2.0	14.3
3/4	150.0	115.0	82.6	42.9	20.9	18.9	15.5	11.1	30.2	19.1	44.5	44.5	2.0	15.9
1	150.0	125.0	88.9	50.8	26.6	24.4	20.6	15.2	36.5	25.4	54.0	50.8	2.0	17.5
1 1/4	150.0	135.0	98.4	63.5	35.0	32.4	29.4	22.8	44.5	33.3	65.1	61.9	2.0	19.1
1 1/2	150.0	155.0	114.3	73.2	40.9	38.1	34.1	27.9	50.8	38.1	73.0	69.9	2.0	20.7
2	150.0	165.0	127.0	91.9	52.5	49.3	42.9	38.1	65.1	42.9	88.9	81.0	2.0	22.3
2 1/2	150.0	190.0	149.2	104.6	62.6	59.0	54.0	45.0	76.2	54.0	103.2	96.8	2.0	25.4
3	150.0	210.0	168.3	127.0	77.9	73.7	66.7	58.5	93.7	73.0	122.2	120.7	2.0	28.6
4	150.0	255.0	200.0	157.2	102.3	97.1	87.3	80.1	120.7	98.4	152.4	152.4	2.0	31.8

OLETSIZE	CL600													
	A	B	C	D	E				F		G		H	T
					S40	S80	S160	XXS	3M	6M	3M	6M		
1/2	150.0	95.0	66.7	35.1	15.7	13.9	11.7	6.3	23.8	14.3	34.9	34.9	7.0	14.3
3/4	150.0	115.0	82.6	42.9	20.9	18.9	15.5	11.1	30.2	19.1	44.5	44.5	7.0	15.9
1	150.0	125.0	88.9	50.8	26.6	24.4	20.6	15.2	36.5	25.4	54.0	50.8	7.0	17.5
1 1/4	150.0	135.0	98.4	63.5	35.0	32.4	29.4	22.8	44.5	33.3	65.1	61.9	7.0	20.7
1 1/2	150.0	155.0	114.3	73.2	40.9	38.1	34.1	27.9	50.8	38.1	73.0	69.9	7.0	22.3
2	150.0	165.0	127.0	91.9	52.5	49.3	42.9	38.1	65.1	42.9	88.9	81.0	7.0	25.4
2 1/2	150.0	190.0	149.2	104.6	62.6	59.0	54.0	45.0	76.2	54.0	103.2	96.8	7.0	28.6
3	150.0	210.0	168.3	127.0	77.9	73.7	66.7	58.5	93.7	73.0	122.2	120.7	7.0	31.8
4	150.0	255.0	215.9	157.2	102.3	97.1	87.3	80.1	120.7	98.4	152.4	152.4	7.0	38.1

1. Applicable Run Pipe Sizes are From out -let Size to 36"
2. Pipe Schedule Number and Weight Designations are in Accordance With ASME B36.10 & MSS SP -97

Dimensions not listed in MSS SP-97 may vary according to the manufacturer.

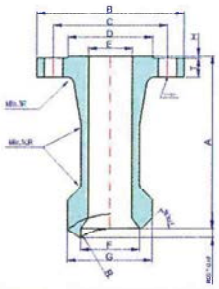

FLANGEOLET

MSS SP-97 & ASME B16.5

Dimensions in mm

OLETSIZE	CL900													
	A	B	C	D	E				F		G		H	T
					S40	S80	S160	XXS	3M	6M	3M	6M		
1/2	150.0	120.0	82.6	35.1	15.7	13.9	11.7	6.3	23.8	14.3	34.9	34.9	7.0	22.3
3/4	150.0	130.0	88.9	42.9	20.9	18.9	15.5	11.1	30.2	19.1	44.5	44.5	7.0	25.4
1	150.0	150.0	101.6	50.8	26.6	24.4	20.6	15.2	36.5	25.4	54.0	50.8	7.0	28.6
1 1/4	150.0	160.0	111.1	63.5	35.0	32.4	29.4	22.8	44.5	33.3	65.1	61.9	7.0	28.6
1 1/2	150.0	180.0	123.8	73.2	40.9	38.1	34.1	27.9	50.8	38.1	73.0	69.9	7.0	31.8
2	150.0	215.0	165.1	91.9	52.5	49.3	42.9	38.1	65.1	42.9	88.9	81.0	7.0	38.1
2 1/2	150.0	245.0	190.5	104.6	62.6	59.0	54.0	45.0	76.2	54.0	103.2	96.8	7.0	41.3
3	150.0	240.0	190.5	127.0	77.9	73.7	66.7	58.5	93.7	73.0	122.2	120.7	7.0	38.1
4	150.0	290.0	235.0	157.2	102.3	97.1	87.3	80.1	120.7	98.4	152.4	152.4	7.0	44.5

OLETSIZE	CL1500													
	A	B	C	D	E				F		G		H	T
					S40	S80	S160	XXS	3M	6M	3M	6M		
1/2	150.0	120.0	82.6	35.1	15.7	13.9	11.7	6.3	23.8	14.3	34.9	34.9	7.0	22.3
3/4	150.0	130.0	88.9	42.9	20.9	18.9	15.5	11.1	30.2	19.1	44.5	44.5	7.0	25.4
1	150.0	150.0	101.6	50.8	26.6	24.4	20.6	15.2	36.5	25.4	54.0	50.8	7.0	28.6
1 1/4	150.0	160.0	111.1	63.5	35.0	32.4	29.4	22.8	44.5	33.3	65.1	61.9	7.0	28.6
1 1/2	150.0	180.0	123.8	73.2	40.9	38.1	34.1	27.9	50.8	38.1	73.0	69.9	7.0	31.8
2	150.0	215.0	165.1	91.9	52.5	49.3	42.9	38.1	65.1	42.9	88.9	81.0	7.0	38.1
2 1/2	150.0	245.0	190.5	104.6	62.6	59.0	54.0	45.0	76.2	54.0	103.2	96.8	7.0	41.3
3	150.0	265.0	203.2	127.0	77.9	73.7	66.7	58.5	93.7	73.0	122.2	120.7	7.0	47.7
4	150.0	310.0	241.3	157.2	102.3	97.1	87.3	80.1	120.7	98.4	152.4	152.4	7.0	54.0

OLETSIZE	CL1500													
	A	B	C	D	E				F		G		H	T
					S40	S80	S160	XXS	3M	6M	3M	6M		
1/2	150.0	135.0	88.9	35.1	15.7	13.9	11.7	6.3	23.8	14.3	34.9	34.9	7.0	30.2
3/4	150.0	140.0	95.2	42.9	20.9	18.9	15.5	11.1	30.2	19.1	44.5	44.5	7.0	31.8
1	150.0	160.0	108.0	50.8	26.6	24.4	20.6	15.2	36.5	25.4	54.0	50.8	7.0	35.0
1 1/4	150.0	185.0	130.2	63.5	35.0	32.4	29.4	22.8	44.5	33.3	65.1	61.9	7.0	38.1
1 1/2	150.0	205.0	146.0	73.2	40.9	38.1	34.1	27.9	50.8	38.1	73.0	69.9	7.0	44.5
2	150.0	235.0	171.4	91.9	52.5	49.3	42.9	38.1	65.1	42.9	88.9	81.0	7.0	50.9
2 1/2	150.0	265.0	196.8	104.6	62.6	59.0	54.0	45.0	76.2	54.0	103.2	96.8	7.0	57.2
3	150.0	305.0	228.6	127.0	77.9	73.7	66.7	58.5	93.7	73.0	122.2	120.7	7.0	66.7
4	150.0	355.0	273.0	157.2	102.3	97.1	87.3	80.1	120.7	98.4	152.4	152.4	7.0	76.2

1. Applicable Run Pipe Sizes are From out -let Size to 36"
2. Pipe Schedule Number and Weight Designations are in Accordance With ASME B36.10 & MSS SP -97

Dimensions not listed in MSS SP-97 may vary according to the manufacturer.

Forged Steel Outlet Fitting

NIPOLET

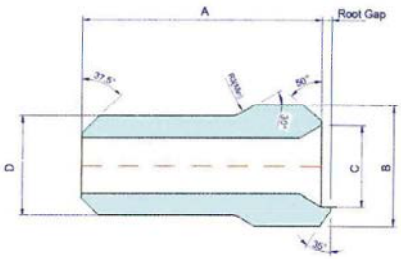

Thread according to ASME B1.20.1
Butt welding end according to ASME B16.25

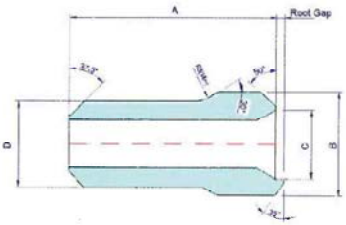

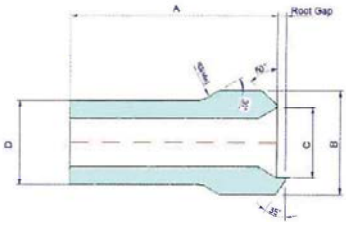

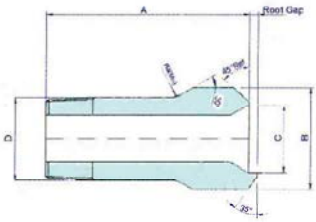

MSS SP-97 & Maker Standard

Dimensions in mm

OLETSIZE	A			B			C			D		
	3M	6M	9M	3M	6M	9M	3M	6M	9M	3M	6M	9M
1/2	89.0	89.0	89.0	34.9	34.9	34.9	23.8	14.3	14.3	21.3	21.3	21.3
3/4	89.0	89.0	89.0	44.5	44.5	44.5	30.2	19.1	19.1	26.7	26.7	26.7
1	89.0	89.0	89.0	54.0	50.8	50.8	36.5	25.4	25.4	33.4	33.4	33.4
1 1/4	89.0	89.0	89.0	65.1	61.9	61.9	44.5	33.3	33.3	42.2	42.2	42.2
1 1/2	89.0	89.0	89.0	73.0	69.9	69.9	50.8	38.1	38.1	48.3	48.3	48.3
2	89.0	89.0	89.0	88.9	81.0	81.0	65.1	42.9	42.9	60.3	60.3	60.3

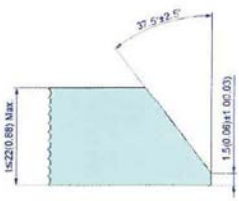

End Bevel

1. Applicable Run Pipe Sizes are From out -let Size to 36"
2. Pipe Schedule Number and Weight Designations are in Accordance With ASME B36.10
3. When Ordering Nipolet Include the Quantity, Size (Run and Out -let), Description (Out -let, Schedule Number) and Material.

NIPOLET
FLANGED END

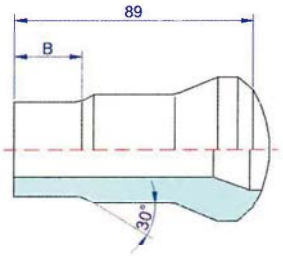

Thread according to ASME B1.20.1
Butt welding end according to ASME B16.25

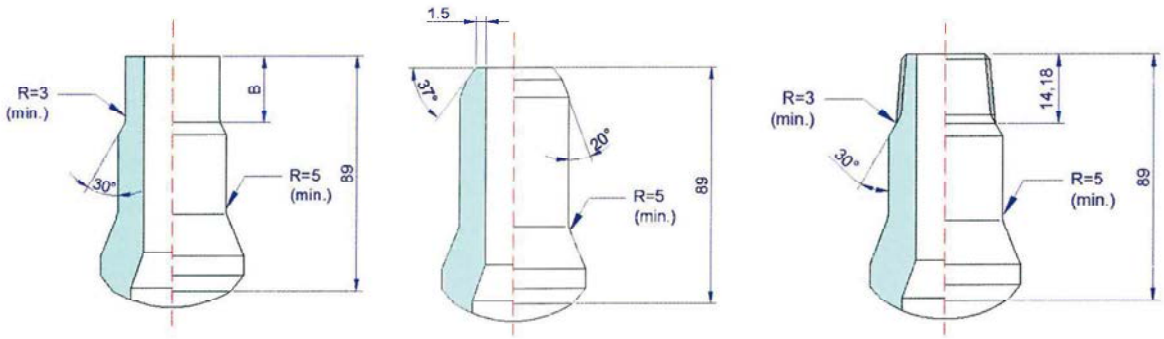

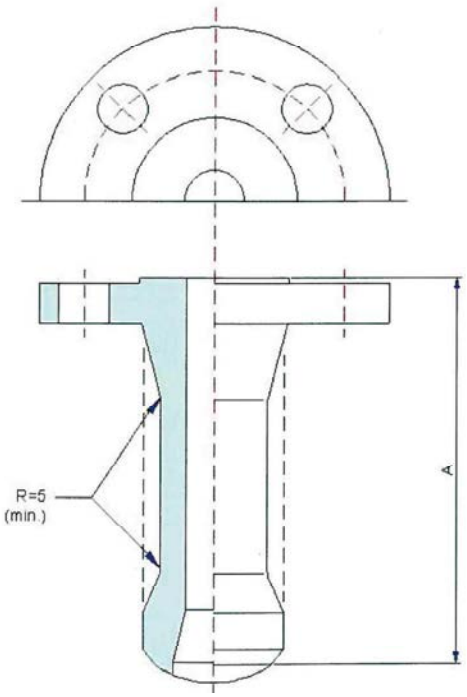

MSS SP-97 & SHELL Standard

Dimensions in mm

NOMINAL SIZE	"A" (Face of flange to crotch) CLASS					"B" MIN
	150	300	600	1500	2500	mm
1/2	150	150	150	150	150	25
3/4	150	150	150	150	150	25
1	150	150	150	150	150	30
1 1/2	150	150	150	150	150	30
2	150	150	150	150	165	

Dimensions not listed in SHELL may vary according to the manufacturer.

Forged Steel Outlet Fitting

INSERT WELDOLET

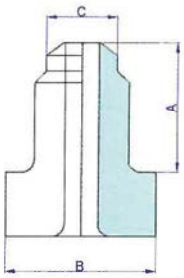

Butt welding end according to ASME B16.25

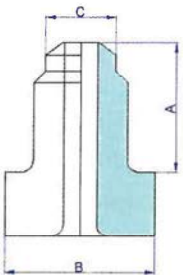

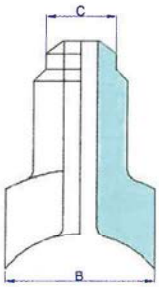

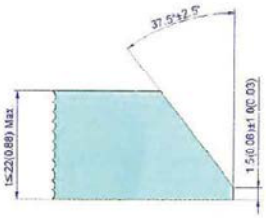

MSS SP-97 & Maker Standard

Dimensions in mm

OLETSIZE	RUN PIPE A						OUTLET B		OUTLET C	
	9.5T	12.7T	13.0T–19.0T	19.1T–25.4T	26.0T–31.8T	31.9T–38.1T	3M	6M	3M	6M
1 1/2	38.1	38.1					88.9	90.4	48.3	48.3
2	38.1	38.1					108.0	111.3	60.3	60.3
2 1/2	41.2	41.2					124.0	127.0	73.0	73.0
3	44.5	44.5	73.2	81.8	85.6	92.0	144.5	146.1	88.9	88.9
4	50.8	50.8	84.1	85.6	88.9	98.3	177.8	180.8	114.3	114.3
5	57.2	57.2	95.3	95.3	101.6	108.0	204.7	209.6	141.3	141.3
6	60.5	77.7	104.6	110.2	114.3	119.1	246.6	265.2	168.3	168.3
8	69.9	93.8	106.2	117.3	124.0	131.0	297.4	341.4	219.1	219.1
10	77.7	96.8	108.0	123.0	127.0	134.9	355.6	362.0	273.0	273.0
12	85.6	98.3	111.0	129.5	136.7	144.3	414.5	420.6	323.8	323.8
14	88.9	103.1	114.3	133.4	139.7	147.6	446.0	457.2	355.6	355.6
16	95.3	106.4	119.1	149.4	152.4	163.6	501.7	508.0	406.4	406.4
18	96.8	111.3	130.3	165.1	165.1	165.1	558.8	570.0	457.2	457.2
20	101.6	119.1	142.8	171.5	177.8	192.0	609.6	635.0	508.0	508.0
24	115.8	139.7	165.1	193.5	203.2	221.5	736.6	770.1	609.0	609.0

1. Applicable Run Pipe Sizes are From out –let Size to 36"
2. Pipe Schedule Number and Weight Designations are in Accordance With ASME B36.10
3. When Ordering Insert weldolet, Include the Quantity, Size (Run and Out –let), Description (Out –let, Schedule Number) and Material.

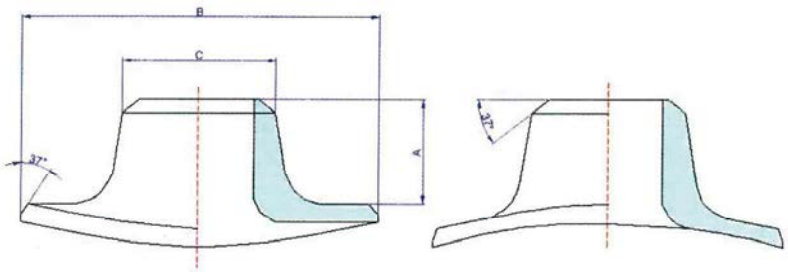

SWEEP OUTLET

Butt welding end according to ASME B16.25

Maker Standard

Dimensions in mm

OLETSIZE	A	B	C
3/4	19.1	80.0	26.7
1	25.4	100.0	33.4
1 1/4	30.0	110.0	42.2
1 1/2	35.0	120.0	48.3
2	38.1	140.0	60.3
3	42.0	178.0	88.9
4	52.0	222.3	114.3
6	68.3	330.2	168.3
8	76.2	381.0	219.1
10	79.4	469.9	273.0
12	84.2	520.7	323.8
14	92.1	690.6	355.6
16	95.3	711.2	406.4
18	117.5	787.4	457.2
20	130.2	838.2	508.0
24	142.9	965.2	609.6

1. Pipe Schedule Number and Weight Designations are in Accordance With ASME B36.10

Dimensions according to the manufacturer.

Forged Steel Outlet Fitting

FLEXOLET
BUTT WELDING

Butt welding end according to ASME B16.25

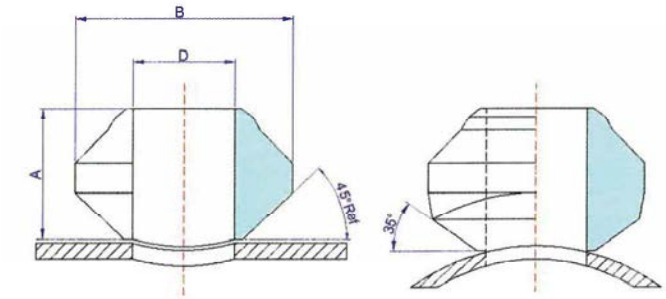

Maker Standard

Dimensions in mm

OLETSIZE	A				B				D / C			
	S40	S80	S160	XXS	S40	S80	S160	XXS	S40	S80	S160	XXS
1/4	19.1	19.1			25.4	25.4			9.5	7.7		
3/8	19.1	19.1			25.4	25.4			12.6	10.8		
1/2	19.1	19.1	33.6	33.6	28.6	28.6	11.7	11.7	15.7	13.9	11.7	6.3
3/4	22.3	22.3	37.8	37.8	38.1	38.1	35.0	35.0	20.9	18.9	15.5	11.1
1	27.0	27.0	42.1	42.1	46.0	46.0	44.5	44.5	26.6	24.4	20.6	15.2
1 1/4	31.8	31.8	44.5	44.5	57.2	57.2	62.0	62.0	35.0	32.4	29.4	22.8
1 1/2	33.3	33.3	50.8	50.8	65.0	65.0	69.9	69.9	40.9	38.1	34.1	27.9
2	38.1	38.1	55.6	55.6	84.1	84.1	81.0	81.0	52.5	49.3	42.9	38.1
2 1/2	41.3	41.3	61.9	61.9	92.8	92.8	96.8	96.8	62.6	59.0	54.0	45.0
3	44.5	44.5	73.0	73.0	108.7	108.7	120.7	120.7	77.9	73.7	66.7	58.5
4	50.8	50.8	84.1	84.1	136.5	136.5	150.4	150.4	102.3	97.1	87.3	80.1
6	60.3	77.8	104.8	104.8	194.5	196.0	220.7	220.7	154.1	146.3	131.7	124.5

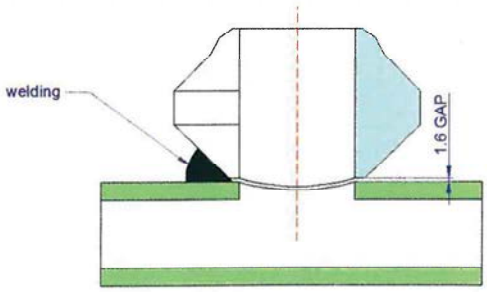

1. Applicable Run Pipe Sizes are From out –let Size to 36"
2. Pipe Schedule Number and Weight Designations are in Accordance With ASME B36.10
3. When Ordering Flexolet, Include the Quantity, Size (Run and Out –let), Description (Out –let, Schedule Number) and Material.

Dimensions according to the manufacturer.

FLEXOLET
SOCKET WELDING

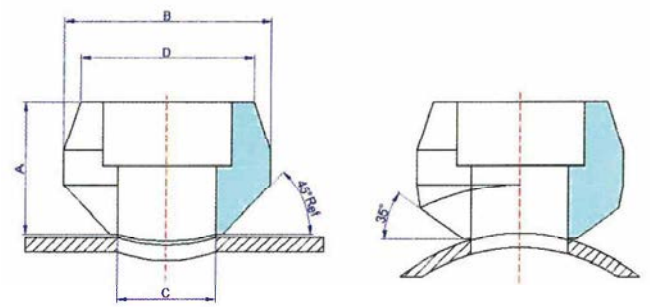

Socket welding end according to ASME B16.11

Maker Standard

Dimensions in mm

OLETSIZE	A			B			C			D		
	3M	6M	9M	3M	6M	9M	3M	6M	9M	3M	6M	9M
1/4	19.1			25.4			9.5			22.0		
3/8	20.6			27.0			12.6			24.0		
1/2	25.4	31.8	31.8	34.9	44.5	44.5	15.7	11.7	6.3	32.0	39.7	39.7
3/4	27.0	36.5	36.5	43.3	52.4	52.4	20.9	15.5	11.1	37.0	45.2	45.2
1	33.3	39.7	39.7	53.2	64.3	64.3	26.6	20.6	15.2	44.0	57.2	57.2
1 1/4	33.3	41.3	41.3	64.3	69.9	69.9	35.0	29.4	22.8	55.0	65.1	65.1
1 1/2	34.9	42.9	42.9	70.6	84.1	84.1	40.9	34.1	27.9	60.5	76.2	76.2
2	38.1	58.7	58.7	84.1	100.8	100.8	52.5	42.9	38.1	75.0	92.1	92.1
2 1/2	46.0			99.2			62.6			92.1		
3	50.8			118.3			77.9			109.5		
4	57.2			147.6			102.3			138.1		

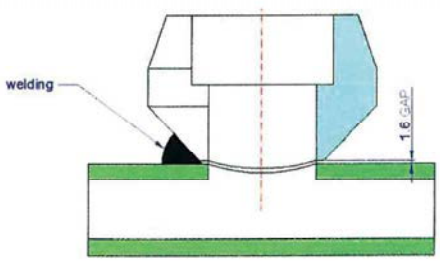

1. Applicable Run Pipe Sizes are From out –let Size to 36"
2. Pipe Schedule Number and Weight Designations are in Accordance With ASME B36.10
3. When Ordering Flexolet, Include the Quantity, Size (Run and Out –let), Description (Out –let, Schedule Number) and Material.

Dimensions according to the manufacturer.

Forged Steel Outlet Fitting

FLEXOLET THREADED

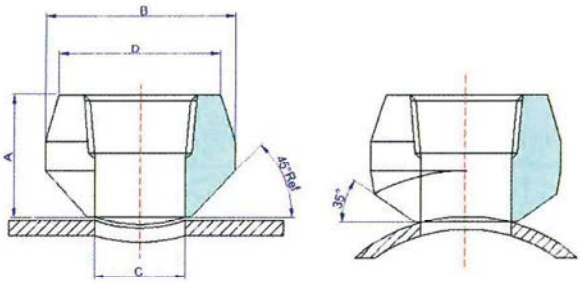

Thread according to ASME B1.20.1

Maker Standard

Dimensions in mm

OLETSIZE	A			B			C			D		
	3M	6M	9M	3M	6M	9M	3M	6M	9M	3M	6M	9M
1/4	19.1			25.4			11.1			22.0		
3/8	20.6			27.0			14.6			24.0		
1/2	25.4	31.8	31.8	34.9	44.5	52.4	18.2	18.2	18.2	32.0	39.7	45.2
3/4	27.0	36.5	36.5	43.3	52.4	64.3	23.4	23.4	23.4	37.0	45.2	57.2
1	33.3	39.7	39.7	53.2	64.3	69.9	29.3	29.3	29.3	44.0	57.2	65.1
1 1/4	33.3	41.3	41.3	64.3	69.9	84.1	38.1	38.1	38.1	55.0	65.1	76.2
1 1/2	34.9	42.9	42.9	70.6	84.1	100.8	44.0	44.0	44.0	60.5	76.2	92.1
2	38.1	58.7	58.7	84.1	100.8		56.3	56.3		75.0	92.1	
2 1/2	46.0			99.2			66.7			92.1		
3	50.8			118.3			82.6			109.5		
4	57.2			147.6			108.0			138.1		

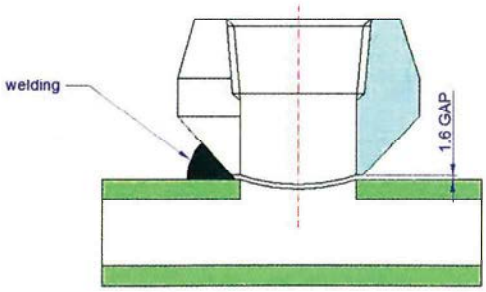

1. Applicable Run Pipe Sizes are From out –let Size to 36"
2. Pipe Schedule Number and Weight Designations are in Accordance With ASME B36.10
3. When Ordering Flexolet, Include the Quantity, Size (Run and Out –let), Description (Out –let, Schedule Number) and Material.

Dimensions according to the manufacturer.

Reference

SAMSUNG FITTING

Materials Specification For Butt-Weld Fitting

ASTM A235, A403, A420, A815 and A860

Marking Symbols	Materials		Chemical Composition(percent)						
			Max. or Range(Unless otherwise indicated)						
	Grade	Thick.	Form	C	Si	Mn	P	S	Ni
WPB	A106 Gr.B		P	–	0.10min	0.29–1.06	0.048	0.058	–
	A515 Gr. 65	0~25mm 26~50 50~100	PL	0.28 0.31 0.33	0.13–0.45	0.90	0.035	0.040	– – –
	A515 Gr. 70	0~25mm 26~50 50~100	PL	0.31 0.33 0.35	0.13–0.45	1.30	0.035	0.040	– – –
WPC	A106 Gr. C		P	0.35	0.10min	0.29–1.06	0.048	0.058	–
WP1	A335 Gr. P1 A204 Gr. B		P PL	0.10–0.20 0..20–0.27	0.10–0.50 0.13–0.45	0.30–0.80 0.90	0.045 0.035	0.045 0.040	– –
WP12	A335 Gr. P12 A387 Gr.12		P PL	0.15 0.17	0.50 0.13–0.45	0.30–0.61 0.40–0.65	0.045 0.035	0.045 0.040	– –
WP11	A335 Gr. P11 A387 Gr. 11		P PL	0.15 0.17	0.50–1.00 0.44–0.86	0.30–0.60 0.35–0.73	0.030 0.035	0.030 0.040	– –
WP22	A335 Gr. P22 A387 Gr. 22		P PL	0.15 0.15–0.17	0.50 0.50	0.30–0.60 0.25–0.66	0.030 0.035	0.030 0.035	– –
WP23	A335 P23		P	0.04–0.10	0.50	0.10–0.60	0.030	0.010	–
WP5	A335 Gr. P5 A387 Gr. 5		P PL	0.15 0.15	0.50 0.50	0.30–0.60 0.25–0.66	0.030 0.040	0.030 0.030	– –
WP9	A335 P9 A387 Gr. 9		P PL	0.15 0.15	0.25–1.00 1.00	0.30–0.60 0.30–0.60	0.025 0.030	0.025 0.030	– –
WP91	A335 P91 A387 Gr. 91		P PL	0.08–0.12	0.20–0.50	0.30–0.60	0.020	0.010	0.40
WP92	A335 P92		P	0.07–0.13	0.50	0.30–0.60	0.020	0.010	0.40
WP304	A312 Gr. TP304 A240 Type 304		P PL	0.08 0.08	0.75 1.00	2.00 2.00	0.040 0.045	0.030 0.030	8.00–11.00 8.00–10.50
WP304H	A312 Gr. TP304H A240 Type 304H*		P PL	0.04–0.10 0.04–0.10	0.75 1.00	2.00 2.00	0.040 0.045	0.030 0.030	8.00–11.00 8.00–10.50
WP304L	A312 Gr. TP304L† A240 Type 304L†		P PL	0.035 0.030	0.75 1.00	2.00 2.00	0.040 0.045	0.030 0.030	8.00–13.00 8.00–12.00
WP309	A312 Gr. TP309 A240 Type 309S		P PL	0.15 0.08	0.75 1.00	2.00 2.00	0.040 0.045	0.030 0.030	12.00–15.00 12.00–15.00
WP310	A312 Gr. TP310 A240 Type 310S		P PL	0.15 0.08	0.75 1.00	2.00 2.00	0.040 0.045	0.030 0.030	19.00–22.00 19.00–22.00
WP347	A312 Gr. TP347 A240 Type 347		P PL	0.08 0.08	0.75 1.00	2.00 2.00	0.040 0.045	0.030 0.030	9.00–13.00 9.00–13.00
WP316	A312 Gr. TP316 A240 Type 316		P PL	0.08 0.08	0.75 1.00	2.00 2.00	0.040 0.045	0.030 0.030	11.00–14.00 10.00–14.00
WP316H	A312 Gr. TP316H A240 Type 316H*		P PL	0.04–0.10 0.40–1.10	0.75 1.00	2.00 2.00	0.040 0.045	0.030 0.030	11.00–14.00 10.00–14.00
WP316L	A312 Gr. TP316L A240 Type 316L†		P PL	0.035 0.030	0.75 1.00	2.00 2.00	0.040 0.045	0.030 0.030	10.00–15.00 10.00–14.00
WP321	A312 Gr. TP321 A240 Type 321		P PL	0.08 0.08	0.75 1.00	2.00 2.00	0.040 0.045	0.030 0.030	9.00–13.00 9.00–12.00
WP321H	A312 Gr. TP321H A240 Type 321H*		P PL	0.04–0.10 0.04–0.10	0.75 1.00	2.00 2.00	0.040 0.045	0.030 0.030	9.00–13.00 9.00–13.00
WP347H	A312 Gr. TP347H A240 Type 347H*		P PL	0.04–0.10 0.04–0.10	0.75 1.00	2.00 2.00	0.040 0.045	0.030 0.030	9.00–13.00 9.00–13.00
WP S31254	A312 S31254 A240 S31254		P PL	0.020	0.80	1.00	0.030	0.010	17.5–18.5
WPL6	A333 and A 334 Gr.6		P	0.30	0.10min	0.29–1.06	0.048	0.058	–
	A516 Gr.60	0~25mm 26~50 50~100	PL	0.21 0.23 0.25	0.13–0.45	0.60–1.30	0.035	0.040	–
WPL3	A333 and A334 Gr.3		P	0.19	0.18–0.37	0.31–0.64	0.050	0.050	3.18–3.82
	A203 Gr. D	0~50mm 50~100	PL	0.17 0.20	0.13–0.45	0.70–0.80	0.035	0.040	3.18–3.82
WPL9	A333 and A334 Gr.8 A203–Gr.A		P PL	0.20 0.17	– 0.15–0.40	0.40–1.06 0.70	0.025 0.035	0.025 0.040	1.60–2.24 2.10–2.50
S31803	A790 S31803 A240 S31803		P PL	0.030	1.0	2.0	0.030	0.020	4.50–6.50
S32750	A790 S32750 A240 S32750		P PL	0.030	0.8	1.2	0.035	0.020	6.0–8.0
S32760	A790 S32760 A240 S32760		P PL	0.05 0.030	1.00	1.00	0.030	0.010	6.00–8.00
WPHY42	AP15L Gr. X42 A572 Gr.42		P PL	0.28	– –	1.25	0.04	0.05	– –
WPHY60	AP15L Gr.X60 A572 Gr.60		P PL	0.26	– –	1.35	0.04	0.05	– –
WPHY65	AP15L Gr.X65 A572 Gr.65		P PL	0.26	– –	1.40	0.04	0.05	– –

NOTE:

1. Asterusks(*) denote that the carbon content shall be 0.04 to 0.10%
2. Daggers(†) denote that the minimum tensile strength shall be•65,000(450 MPs) and that the minimun yield strength shall be 25,000 pso(170 MPa)
3. The yield strength shall be determined by the offset method at 0.2% limiting permanent set in accordance with ASTM A370 Specification An alternative method of determing yield strength may be based on a total extension under load of 0.5%
4. The basic minimum elongation for walls 3/16"(7.94mm) and over in thickness shall be determined according to strip tests:all small sizes are tested in their full section
5. P–denotes Pipe, PL Plate

Cr	Mo	Ti	Other Element	Tensile Requirements: Tensile Strength Min. or Range Ksi(Mpa)	Tensile Requirements: Yield Strength Min.** Ksi(Mpa)	Tensile Requirements: Longitudinal Elongation in 2 in.(50mm) Min.,%	Marking Symbols
– – – – – – – –	– – – – – – – –	– – – – – – – –	– – – – – – – –	60 (415) 65–85 (450–585) 70–90 (485–620)	35 (240) 35 (240) 38 (260)	30 23 21	WPB
–	–	–	–	70 (485)	40 (275)	30	WPC
– –	0.44–0.65 0.41–0.64	– –	– –	55 (380) 70–90 (485–620)	30 (205) 40 (275)	30 21	WP1
0.80–1.25 0.74–1.21	0.44–0.65 0.40–0.65	– –	– –	60 (415) 65–85 (450–585)	30 (205) 40 (275)	30 22	WP12
1.00–1.50 0.94–1.56	0.44–0.65 0.40–0.70	– –	– –	60 (415) 70–100 (515–690)	30 (205) 45 (310)	30 22	WP11
1.90–2.60 1.88–2.62	0.87–1.13 0.85–1.15	– –	– –	60 (415) 75–100 (515–690)	30 (205) 45 (310)	30 18	WP22
1.90–2.60	0.05–0.30	–	V :0.20–0.30 Cb:0.02–0.08 B :0.0005–0.006 N :0.030 Al :0.030 W :L1.45–1.75	74	58	20	WP23
4.00–6.00 4.00–6.00	0.45–0.65 0.40–0.70	– –	– –	60 (415) 75–100 (515–690)	30 (205) 45 (310)	30 18	WP5
8.00–10.00	0.90–1.10	–	–	60 60–85	30 30	30 18	WP9
8.00–9.50	0.85–1.05	–	V :0.18–0.25 Cb:0.06–0.10 N :0.003–0.70 Al :0.04	85 85–110	60 60	20 18	WP91
8.50–9.50	0.30–0.60	–	V :0.15–0.25 Cb:0.04–0.09 B :0.001–0.006 N :0.03–0.07 Al :0.04 W :1.50–2.00	90	64	20	WP92
180.0–20.00 18.00–20.00	– –	– –	– –	75 (515) 75 (515)	30 (205) 30 (205)	35 40	WP304
18.00–20.00 18.00–20.00	– –	– –	– –	75 (515) 75 (515)	30 (205) 30 (205)	35 40	WP304H
18.00–20.00 18.00–20.00	– –	– –	– –	70 (485) 70 (485)	25(170) 25(170)	35 40	WP304L
22.00–24.00 22.00–24.00	– –	– –	– –	75 (515) 75 (515)	30 (205) 30 (205)	35 40	WP309
24.00–26.00 24.00–26.00	– –	– –	– –	75 (515) 75 (515)	30 (205) 30 (205)	35 40	WP310
17.00–20.00 17.00–19.00	– –	– –	Cb+Ta10xC–1.00 Cb+Ta10xC–1.10	75 (515) 75 (515)	30 (205) 30 (205)	35 40	WP347
16.00–18.00 16.00–18.00	2.00–3.00 2.00–3.00	– –	– –	75 (515) 75 (515)	30 (205) 30 (205)	35 40	WP316
16.00–18.00 16.00–18.00	2.00–3.00 2.00–3.00	– –	– –	75 (515) 75 (515)	30 (205) 30 (205)	35 40	WP316H
16.00–18.00 16.00–18.00	2.00–3.00 2.00–3.00	– –	– –	70 (485) 70 (485)	25(170) 25(170)	35 40	WP316L
17.00–20.00 17.00–19.00	– –	5XC–0.60 5XC–0.70	– –	75 (515) 75 (515)	30 (205) 30 (205)	35 40	WP321
17.00–20.00 17.00–19.00	– –	4XC–0.60 4XC–0.70	– –	75 (515) 75 (515)	30 (205) 30 (205)	35 40	WP321H
17.00–20.00 17.00–19.00	– –	– –	Cb+Ta8xC–1.0 Cb+Ta8xC–1.0	75 (515) 75 (515)	30 (205) 30 (205)	35 40	WP347H
19.5–20.5	6.00–6.50	–	N:0.18–0.22 Cu:0.50–1.00	94 (650)	44 (300)	35	S31254
– –	– –	– –	– –	60 (414) 60–80 (415–550)	35 (241) 32 (220)	30 25	WPL6
– –	– –	– –	– –	65 (448) 65–85 (450–585)	35 (241) 37 (255)	30 23	WPL3
– –	– –	– –	Cu–0.75–1.25 –	63 (435) 65–85 (450–585)	46 (315) 37 (255)	28 23	WPL9
21.0–23.0	2.50–3.50	– –	N:0.08–0.20	90 (620)	65 (450)	25	S31803
24.0–26.0	3.0–5.0	– –	N:0.24–0.32 Cu:0.5	116 (795)	80 (550)	15	S32750
24.00–26.00	3.00–4.00			108 (750) 109–130 (750–895)	80 (550)	25	S32760
– –	– –	– –	– –	60 (414)	42 (289)	– 24	WPHY42
– –	– –	0.03 Min. –	Cb:0.005min. V:0.02min.	75 (517)	60 (413)	– 18	WPHY60
– –	– –	– –	Cb:0.005min. V:0.02min.	77 (530) 80 (550)	65 (448)	– 17	WPHY65

Comparison of ASTM Specification and Similar Standards

Steel Composition	ASTM Specificationin and Grade				KS Specification and Grade
	Marking Symbol	Pipe	Plate	Forgings	Pipe
Carbon Steel	–	A120	A283–A	–	SPP
Carbon Steel	–	A53–B	A242	–	SPPS38
Carbon Steel	–	A53–B	A242	–	SPPS42
Carbon Steel	WPB	A106–B	A515–65 or 70	A181–2and A105	SPHT42
Carbon Steel	WPC	A106–C	–	–	SPHT49
Carbon Steel	WPL6	A333 and A334–6	A516–60	A350–LF2	SPLT39
3 1/2% Ni Steel	WPL3	A333 and A334–3	A203–D	A350–LF3	–
2%Ni–1% Cu Steel	WPL9	A333 and A334–9	A203–A	A350–LF9	–
Carbon –Molybdenum Steel	WP1	A335–P1	A204–B	A182–F1	SPA12
1% Cr–1/2% Molybdenum Steel	WP12	A335–P12	A387–12	A182–F12	SPA22
1 1/4% Cr–1/2% Molybdenum Steel	WP11	A335–P11	A387–11	A182–F11	SPA23
2 1/4 Cr –1% Molybdenum Steel	WP22	A335–P22	A387–22	A182–F22	SPA24
5% Cr–1/2% Molybdenum Steel	WP5	A335–P5	A387–5	A182–F5	SPA25
7% Cr–1/2% Molybdenum Steel	WP7	A335–P7	–	A182–F7	–
9% Cr–1% Molybdenum Steel	WP9	A335–P9	–	A182–F9	–
9% Cr–1% Mo–0.2%V+Cb+N	WP91	A335–P91	A387–91	A182–F91	–
18% Cr–8% Ni Steel	WP304	A312–TP304	A240–Type 304	A182–F304	ST304TP
18% Cr–8% Ni–(0.04–0.10)% C Steel	WP304H	A312–TP304H	A240–Type 304H	A182–F304H	–
18% Cr–8% Ni–0.035% C Steel	WP304L	A312–TP304L	A240–Type 304L	A182–F304L	STS304LTP
22% Cr–12% Ni Steel	WP309	A312–TP309	A240–Type 309S	–	STS309STP
25% Cr–20% Ni Steel	WP310	A312–TP310	A240–Type 310S	A182–F310	STS310STP
18% Cr–8% Ni–Cb+ Ta Steel	WP347	A312–TP347	A240–Type 347	A182–F347	STS347TP
18% Cr–8% Ni–Mo Steel	WP316	A312–TP316	A240–Type 316	A182–F316	STS316TP
18% Cr–8% Ni–Mo–(0.04–0.10)% C Steel	WP316H	A312–TP316H	A240–Type 316H	A182–F316H	STS316HTP
18% Cr–8% Ni–Mo–0.035% C Steel	WP316L	A312–TP316L	A240–Type 316L	A182–F316L	STS316LTP
18% Cr–8% Ni–Ti Steel	WP321	A312–TP321	A240–Type 321	A182–F321	STS321TP
18% Cr–8% Ni–Ti–(0.04–0.10)% C Steel	WP321H	A312–TP321H	A240–Type 321H	A182–F321H	–
18% Cr–8% Ni–Cb+Ta–(0.04–0.10)% C Steel	WP347H	A312–TP347H	A240–Type 347H	A182–F347H	STS347HTP

KS Specification and Grade	JIS Grade		B.S. Specification and Grade	DIN Specification and Grade	Steel Composition
Plate	Pipe	Plate	Pipe	Pipe	
SB41	SGP	SS41	1378-M	2440-ST33-1	Carbon Steel
SWS41B	STPG370	SM41B	3602-ERW23	1626-ST37	Carbon Steel
SWS41B	STPG410	SM41B	3602-ERW27	-	Carbon Steel
SBB42	STPT410	SB42	3602-Steel 27	17175-St 45.8	Carbon Steel
SBB49	STPT480	SB49	3602-Steel 35	-	Carbon Steel
SLAL39	STPL380	-	3603-Steel 27 LT30	-	Carbon Steel
-	STPL450	-	3603-Steel 530 LT100	-	3 1/2% Ni Steel
-	STPL690	-	-	-	2%Ni-1% Cu Steel
SBB46M	STPA12	-	-	17175-15 Mo3	Carbon-Molybdenum Steel
SCMV2	STPA22	-	3604-HF620	17175-13CrMo44	1% Cr-1/2% Molybdenum Steel
SCMV3	STPA23	-	3604-HF621	-	1 1/4% Cr-1/2% Molybdenum Steel
SCMV4	STPA24	-	3604-HF622,27	17175-10CrMo910	2 1/4 Cr-1% Molybdenum Steel
SCMV6	STPA25	-	3604-HF625	-	5% Cr-1/2% Molybdenum Steel
-	-	-	-	-	7% Cr-1/2% Molybdenum Steel
-	STPA26	-	-	-	9% Cr-1% Molybdenum Steel
-	-	-	-	-	9% Cr-1% Mo-0.2%V+Cb+N
STS304	SUS304TP	SUS304	3605-801	17440-X5CrNi189	18% Cr-8% Ni Steel
-	SUS304HTP	-	3605-811	-	18% Cr-8% Ni-(0.04-0.10)% C Steel
STS304L	SUS304LTP	SUS304L	3605-811L	17440-X2CrNi189	18% Cr-8% Ni-0.035% C Steel
STS309S	SUS309STP	SUS309S	-	-	22% Cr-12% Ni Steel
STS310S	SUS310STP	SUS310S	3605-805S	-	25% Cr-20% Ni Steel
STS347	SUS347TP	SUS437	3605-822 Nb	17440-X 0CrNiNb189	18% Cr-8% Ni-Cb+ Ta Steel
STS316	SUS316TP	SUS316	3605-845	17440-X5CrNiMo1810	18% Cr-8% Ni-Mo Steel
-	SUS316HTP	-	3605-855	-	18% Cr-8% Ni-Mo-(0.04-0.10)% C Steel
STS316L	SUS321LTP	SUS316L	3605-845L	17440-X2CrNiMo1810	18% Cr-8% Ni-Mo-0.035% C Steel
STS321	SUS321TP	SUS321	3605-822Ti	17440-X10CrNiTi89	18% Cr-8% Ni-Ti Steel
-	SUS321HTP	-	3605-832Ti	-	18% Cr-8% Ni-Ti-(0.04-0.10)% C Steel
-	SUS347HTP	-	3605-832Nb	-	18% Cr-8% Ni-Cb+Ta-(0.04-0.10)% C Steel

Dimensions of Welded and Seamless Pipe
Carbon, Alloy and Stainless Steel

ASME B36.10M, B36.19M

Unit : mm

Nominal Pipe Size (in.)	Outside Diameter	Nominal Wall Thickness								
		Sch 5S	Sch 10S	Sch 10	Sch 20	Sch 30	Sch 40S	STD	Sch 40	Sch 60
1/8	10.29	–	1.24	–	–	–	1.73	1.73	1.73	–
1/4	13.72	–	1.65	–	–	–	1.73	1.73	2.24	–
3/8	17.14	–	1.65	–	–	–	2.31	2.31	2.31	–
1/2	21.34	1.65	2.11	–	–	–	2.77	2.77	2.77	–
3/4	26.67	1.65	2.11	2.11	–	–	2.87	2.87	2.87	–
1	33.40	1.65	2.77	–	–	3.38	3.38	3.38	3.38	–
1 1/4	42.16	1.65	2.77	2.77	–	–	3.56	3.56	3.56	–
1 1/2	48.26	1.65	2.77	2.77	–	–	3.68	3.68	3.68	–
2	60.32	1.65	2.77	2.77	–	–	3.91	3.91	3.91	–
2 1/2	73.02	2.11	3.05	3.05	–	–	5.16	5.16	5.16	–
3	88.90	2.11	3.05	3.05	–	–	5.49	5.49	5.49	–
3 1/2	101.60	2.11	3.05	3.05	–	–	5.74	5.74	5.74	–
4	114.30	2.11	3.05	3.05	–	–	6.02	6.02	6.02	–
5	141.30	2.77	3.40	3.40	–	–	6.55	6.55	6.55	–
6	168.28	2.77	3.40	–	–	–	7.11	7.11	7.11	–
8	219.08	2.77	3.76	–	6.35	7.04	8.18	8.18	8.18	10.31
10	273.05	3.40	4.19	–	6.35	7.80	9.27	9.27	9.27	12.70
12	323.85	3.96	4.57	–	6.35	8.38	9.52	9.52	10.31	14.27
14	355.60	3.96	4.78	6.35	7.92	9.52	–	9.52	11.13	15.06
16	406.40	4.19	4.78	6.35	7.92	9.52	–	9.52	12.70	16.66
18	457.20	4.19	4.78	6.35	7.92	11.12	–	9.52	14.27	19.05
20	508.00	4.78	5.54	6.35	9.52	12.70	–	9.52	15.06	20.62
22	558.8	4.78	5.54	6.35	9.52	12.70	–	9.52	15.87	22.22
24	609.6	5.54	6.35	6.35	9.52	14.27	–	9.52	17.48	24.61
26	660.4	–	–	7.92	12.70	–	–	9.52	–	–
28	711.2	–	–	7.92	12.70	15.88	–	9.52	–	–
30	762.0	6.35	7.92	7.92	12.70	15.88	–	9.52	–	–
32	812.8	–	–	7.92	12.70	15.88	–	9.52	17.48	–
34	863.6	–	–	7.92	12.70	15.88	–	9.52	17.48	–
36	914.4	–	–	7.92	12.70	15.88	–	9.52	19.05	–
38	965.2	–	–	–	–	–	–	9.52	–	–
40	1016.0	–	–	–	–	–	–	9.52	–	–
42	1066.8	–	–	–	–	–	–	9.52	–	–
44	1117.6	–	–	–	–	–	–	9.52	–	–
46	1168.4	–	–	–	–	–	–	9.52	–	–
48	1219.2	–	–	–	–	–	–	9.52	–	–

ASME B36.10M, B36.19M

Unit : mm

Nominal Wall Thickness								Outside Diameter	Nominal Pipe Size (in.)
Sch 80S	XS	Sch 80	Sch 100	Sch 120	Sch 140	Sch 160	XXS		
2.41	2.41	2.41	–	–	–	–	–	10.29	1/8
3.02	3.02	3.02	–	–	–	–	–	13.72	1/4
3.20	3.20	3.20	–	–	–	–	–	17.14	3/8
3.73	3.73	3.73	–	–	–	4.75	7.47	21.34	1/2
3.91	3.91	3.91	–	–	–	5.54	7.82	26.67	3/4
4.55	4.55	4.55	–	–	–	6.35	9.09	33.40	1
4.85	4.85	4.85	–	–	–	6.35	9.70	42.16	1 1/4
5.08	5.08	5.08	–	–	–	7.14	10.16	48.26	1 1/2
5.54	5.54	5.54	–	–	–	8.71	11.07	60.32	2
7.01	7.01	7.01	–	–	–	9.52	14.02	73.02	2 1/2
7.62	7.62	7.62	–	–	–	11.13	15.24	88.90	3
8.08	8.08	8.08	–	–	–	–	16.15	101.60	3 1/2
8.56	8.56	8.56	–	11.13	–	13.49	17.12	114.30	4
9.53	9.53	9.53	–	12.70	–	15.88	19.05	141.30	5
10.97	10.97	10.97	–	14.27	–	18.24	21.95	168.28	6
12.70	12.70	12.70	15.06	18.26	20.62	23.01	22.22	219.08	8
12.70	12.70	15.06	18.26	21.44	25.40	28.58	25.40	273.05	10
12.70	12.70	17.48	21.44	25.40	28.58	33.32	25.40	323.85	12
	12.70	19.05	23.83	27.79	31.75	35.71	–	355.60	14
	12.70	21.44	26.19	30.96	36.52	40.46	–	406.40	16
	12.70	23.82	29.36	34.92	39.67	45.24	–	457.20	18
	12.70	26.19	32.54	38.10	44.45	49.99	–	508.00	20
	12.70	28.58	34.92	41.28	47.62	53.98	–	558.8	22
	12.70	30.93	38.89	46.02	52.37	59.51	–	609.6	24
	12.70	–	–	–	–	–	–	660.4	26
	12.70	–	–	–	–	–	–	711.2	28
	12.70	–	–	–	–	–	–	762.0	30
	12.70	–	–	–	–	–	–	812.8	32
	12.70	–	–	–	–	–	–	863.6	34
	12.70	–	–	–	–	–	–	914.4	36
	12.70	–	–	–	–	–	–	965.2	38
	12.70	–	–	–	–	–	–	1016.0	40
	12.70	–	–	–	–	–	–	1066.8	42
	12.70	–	–	–	–	–	–	1117.6	44
	12.70	–	–	–	–	–	–	1168.4	46
	12.70	–	–	–	–	–	–	1219.2	48

Socket Welding Fitting Approx Weight List

Unit:kgs

N.P.S (in.)	90°Elbow		45°Elbow		Tee		Cross	
	3000	6000	3000	6000	3000	6000	3000	6000
1/4	0.12	0.14	0.09	0.20	0.10	0.19	0.18	0.23
3/8	0.11	0.12	0.18	0.19	0.16	0.17	0.17	0.40
1/2	0.20	0.23	0.17	0.18	0.28	0.31	0.36	0.66
3/4	0.28	0.60	0.23	0.50	0.37	0.86	0.51	1.12
1	0.46	1.05	0.35	0.88	0.57	1.45	0.68	1.73
1 1/4	0.65	1.40	0.65	0.69	0.87	1.70	1.02	2.38
1 1/2	0.96	2.40	0.80	1.85	1.28	3.04	1.38	3.75
2	1.50	3.65	1.20	2.93	1.80	4.44	2.32	7.86
2 1/2	2.25	–	3.06	–	2.85	–	7.48	–
3	4.00	–	4.76	–	5.50	–	10.43	–
4	9.40	–	8.25	–	12.24	–	18.14	–

Unit:kgs

N.P.S (in.)	Coupling		H/Coupling		Cap		Boss		Union	
	3000	6000	3000	6000	3000	6000	3000	6000	3000	6000
1/4	0.06	0.06	0.06	0.07	0.04	0.04	0.09	0.09	0.23	0.25
3/8	0.06	0.07	0.08	0.08	0.05	0.06	0.14	0.15	0.35	0.42
1/2	0.11	0.14	0.14	0.30	0.07	0.22	0.24	0.45	0.40	0.85
3/4	0.17	0.25	0.20	0.43	0.13	0.35	0.28	0.52	0.50	1.00
1	0.27	0.36	0.34	0.69	0.21	0.55	0.41	0.73	0.70	1.30
1 1/4	0.35	0.46	0.48	0.96	0.37	0.89	0.44	0.77	1.20	2.00
1 1/2	0.43	0.58	0.51	1.20	0.60	1.15	0.63	1.12	1.50	3.80
2	0.72	1.20	1.00	2.05	0.99	2.05	1.09	1.82	2.58	6.40
2 1/2	1.13	1.60	1.55	3.25	1.50	3.75	–	–	5.14	6.87
3	1.50	2.18	2.13	4.33	2.30	5.10	–	–	7.12	10.85
4	2.50	3.95	3.65	6.45	4.00	8.20	–	–	12.40	–

Unit:kgs

N.P.S (in.)	Weldolet				Sockolet		Thredolet	
	STD	XS	SCH 160	XXS	3000	6000	3000	6000
1/2	0.08	0.09	0.11	0.11	0.14	0.23	0.11	0.20
3/4	0.11	0.14	0.32	0.32	0.15	0.36	0.13	0.34
1	0.23	0.21	0.38	0.38	0.27	0.59	0.28	0.56
1 1/4	0.36	0.41	0.57	0.57	0.39	0.73	0.41	0.71
1 1/2	0.45	0.50	0.80	0.80	0.47	0.91	0.45	0.89
2	0.80	0.80	1.00	1.00	0.73	2.93	0.80	2.30
2 1/2	1.14	1.20	1.54	1.54	1.25	–	1.36	–
3	1.82	1.90	2.90	2.90	1.73	–	1.98	–
4	2.86	2.90	4.80	4.80	3.30	–	3.22	–
5	4.66	4.70	6.50	6.50	–	–	–	–
6	6.45	10.50	12.70	12.70	–	–	–	–
8	10.68	16.80	20.50	20.50	–	–	–	–
10	17.73	20.90	38.60	38.60	–	–	–	–

Unit:kgs

N.P.S (in)	90°Elbow		45°Elbow		Tee		Cross	
	2000	3000	2000	3000	2000	3000	2000	3000
1/4	0.11	0.17	0.06	0.11	0.11	0.13	0.23	0.17
3/8	0.14	0.29	0.11	0.23	0.14	0.37	0.23	0.45
1/2	0.25	0.59	0.20	0.34	0.25	0.54	0.40	0.68
3/4	0.31	0.63	0.29	0.54	0.43	0.85	0.51	1.13
1	0.51	1.02	0.43	0.85	0.65	1.13	0.77	1.61
1 1/4	0.77	1.25	0.63	0.97	0.91	0.42	1.13	1.87
1 1/2	1.02	1.59	0.74	1.36	1.25	2.27	1.45	2.95
2	1.59	2.47	1.22	1.93	2.10	3.06	2.38	3.69
2 1/2	2.95	4.85	3.35	3.52	3.94	5.96	7.46	7.60
3	4.76	6.55	5.13	4.76	5.98	9.24	8.85	8.96
4	10.30	13.80	8.65	8.68	12.40	17.90	14.50	14.80

Unit:kgs

N.P.S (in)	Coupling		H/Coupling		Cap		Boss	
	3000	6000	3000	6000	3000	6000	3000	6000
1/4	0.05	0.12	0.02	0.06	0.05	0.09	0.09	0.13
3/8	0.06	0.18	0.03	0.09	0.08	0.14	0.11	0.24
1/2	0.14	0.28	0.07	0.14	0.12	0.25	0.24	0.44
3/4	0.21	0.45	0.10	0.23	0.20	0.36	0.29	0.55
1	0.41	0.80	0.21	0.37	0.31	0.70	0.42	0.74
1 1/4	0.72	1.40	0.36	0.70	0.60	0.80	0.61	0.75
1 1/2	1.06	1.95	0.52	0.90	0.73	1.28	0.65	1.17
2	1.40	2.80	0.69	1.22	1.05	2.16	1.13	1.90
2 1/2	2.55	3.80	1.25	1.85	2.27	2.72	–	–
3	3.83	6.00	1.84	2.95	3.83	4.95	–	–
4	6.35	10.70	3.51	5.40	6.35	9.21	–	–

Unit:kgs

N.P.S (in)	Union		Nipple	S/H Plug	H/H Plug	R/H Plug	H/H Bushing	Flush Bushing
	3000	6000						
1/4	0.14	0.45	0.04	0.01	0.03	0.05	0.03	0.03
3/8	0.20	0.60	0.05	0.03	0.06	0.08	0.03	0.03
1/2	0.35	0.85	0.09	0.06	0.09	0.17	0.03	0.03
3/4	0.43	1.40	0.75	0.09	0.14	0.17	0.09	0.06
1	0.65	1.75	0.27	0.14	0.23	0.34	0.09	0.06
1 1/4	0.98	3.00	0.45	0.25	0.51	0.34	0.17	0.06
1 1/2	1.26	4.00	0.62	0.40	0.63	0.71	0.31	0.09
2	2.01	5.50	1.03	0.68	1.02	1.36	0.74	0.17
2 1/2	5.14	6.87	1.51	1.02	1.76	2.15	1.08	0.29
3	7.12	10.85	2.00	1.31	2.67	3.45	1.59	0.45
4	12.40	–	–	3.26	5.90	5.83	3.77	0.91